Enriching Lives

ILLUSTRATED SPARE PART LIST FOR

HA694T ENGINE FORPOWER GENERATION A/C – EXPORT

APPLICATION CODE NO. 06.4432

KIRLOSKAR OIL ENGINES LIMITED
Regd. Office: Laxmanrao Kirloskar Road, Khadki, Pune - 411 003, (India).
Tel.: +91 (20) 2581 0341, 2581 5341. Fax: +91 (20) 2581 3208, 2581 0209.
Website: www.koel.co.in

MAY – 2015 PUBLICATION NO. 06.842.68.0.00-REV.01

GROUP INDEX
APPLICATION CODE 06.4432

SR.NO.	DESCRIPTION	GROUP NO.	QTY.	PAGE NO.
1	ADAPTOR AND BRACKET FOR TURBOCHARGER	06.765	1	5
2	AIR CLEANER MOUNTING FOR HA67TC WITH K26 TURBO (STAGE2)	06.770.2	1	6
3	AIR CLEANER MOUNTING FOR HA6TC WITH K26 TURBOy	06.770.1	1	7
4	ALT MTG ARRANGEMENT HA694TC/HA494TC 12V	06.326	1	8,9
5	CHARGING ALTERNATOR 12V	3H.315.2	1	10
6	ASSEMBLY OF CAM SHAFT FOR HA US TIER 1 ENGINE	06.738	1	11
7	BANDED WRAPPED BELT 2JA51 (1328 MM PITCH LENGTH)	06.032	1	12
8	BASE PLATE FOR HA6 & HA6TC STANDARDIZATION	06.1042	1	13 TO 16
9	BATTERY BRACKET FOR HA OPEN STANDARD GENSET	4H.1189.3	1	17
10	BELT GUARD (STAGE 1)	06.372.1	1	18
11	BELT GUARD (STAGE 2)	06.372.2	1	19
12	BLANKING PLATE FOR HYD PUMP BORE	03.047	1	20
13	BOX TYPE BREATHER	04.600	1	21
14	BT UNIT WITH MODIFIED SHAFT AND 5.5 DIA SPRING	06.973	1	22 TO 24
15	CLAMP FOR PRECLEANER	06.048.03	1	25
16	COMBINED LEAKOFF PIPE ASSLY	06.006	1	26
17	CON ROD AND PISTON ASSEMBLY (NA ROD TC PISTON.)	02.533	6	27,28
18	COOLING AIR BLOWER WITH FAN PULLEY (90PCD, A SECTION, 2 GROOVES)	06.085	1	29,30
19	CRANK CASE (S/F L.O.CONN.TO FUEL PUMP)	06.440	1	31 TO 33
20	CRANK PULLEY 238 PCD 3 GR W/O DAMPER	04.334	1	34
21	CRANK SHAFT	06.004	1	35
22	CYL HEADTEMP SWITCH	04.093	1	36
23	CYLINDER HEAD (FOR ENGINES SATISFYING EURO II NORMS AND CPCB STAGE 1)	02.120	6	37 TO 40
24	CYLINDER LINER (TURBOCHARGED)	02.183	6	41
25	DELIVERY TUBE	03.012	1	42
26	DIP STICK (20DEG INCL SHORT)	06.248	1	43
27	END COVER FORBELL HSG.	06.091	1	44
28	ENGINE WIRING HARNESS WITH DSE 6120 MKII GEMS SENSOR FOR HA6 & HA6TC OPEN GENSET	06.1044.2	1	45
29	EXHAUST AIR BAFFLE	06.024	1	46
30	EXHAUST DIFFUSER (K26 TURBO)	04.579	1	47

SR.NO.	DESCRIPTION	GROUP NO.	QTY.	PAGE NO.
31	EXHAUST MANIFOLD FOR K26 TURBOCHARGER	06.764	1	48
32	EXHAUST SILENCER (HEAT RESISTANCE BLACK PAINT)	04.599	1	49
33	EXPANSION BELLOW(3")AND MOUNTING	06.602	1	50
34	FLYWHEEL END FOOT(PACKING)	03.072	1	51
35	FLYWHEEL HOUSING SAE-3 (PG APPLICATION)	03.974	1	52
36	FLYWHEEL(C-110PTO & SP-111 PTO)	04.039	1	53
37	FRONT COVER (STAGE 1)	06.013.4	1	54
38	FRONT COVER (STAGE 2)	06.013.2	1	55
39	FRONT COWLING (WITH FULL RING)	06.021	1	56
40	FUEL CONNECTION	06.610	1	57
41	FUEL FILTER & PIPING(SPINON)	06.474	1	58
42	FUEL INJECTION PUMP (STAGE 2)	06.441.2	1	59
43	FUEL PUMP 4% GOVERNING (CPCB) S/F VERTICAL STOP SOLENOID	06.815.2	1	60
44	FUEL PUMP GEAR(SR 2000 PUMP)	04.266	1	61
45	GEAR END FOOT (CLOSED COUPLED GENSET)	02.434	1	62
46	HOT AIR DUCTING(UPWARD OPENING) KKK TURBO	06.811	1	63
47	INJECTION PIPES	06.026	1	64 TO 68
48	INJECTOR AND NOZZLE	04.596	6	69
49	INLET CAP (FOR OIL BATH AIR CLEANER)	06.483.01	1	70
50	INLET MANIFOLD(STAGE 1)	06.763.1	1	71
51	INSTRUCTION STICKERS HA(SR 2000 F.P.)	06.528	1	72
52	INTERMEDIATE GEAR	03.008	1	73
53	KIT GROUP FOR CC GENSET. (FASTNERS.) FOR UC224 ALT.	02.511.3	1	74
54	LOP AND WT SENSOR UNIT FOR EXPORT (WITHOUT WATER TEMP SWITCH) 4-20mA	2H.092.13	1	75
55	LOWER COWLING	06.019	1	76
56	LUB OIL CONNECTIONS FOR K26 TURBOCHARGER	06.767	1	77,78
57	LUB OIL COOLER	06.020	1	79
58	LUB OIL FILTER &MTG(SPINON, COMMON HEADER) WITH ASBESTOSS FREE JOINT	06.436...EXP	1	80
59	LUB OIL PUMP	06.010	1	81,82
60	LUB OIL SUMP(20 DEG INCLINATION)	06.074	1	83
61	LUBE OIL DRAINPUMP AND MOUNTING ARRANGEMENT	3H.345.25	1	84
62	NAME PLATE	38.065	1	85
63	NAME PLATE FOR KG GENSET	3H.227	1	86
64	NOZZLE LEAK OFF PIPE (CPCB)	06.819	1	87
65	OIL BATH AIR CLEANER W/O PRE CLEANER	06.605	1	88
66	OIL FILLER CAP	03.042	1	89

SR.NO.	DESCRIPTION	GROUP NO.	QTY.	PAGE NO.
67	OIL SEAL HOUSING F W E	03.007	1	90
68	OIL SPRAY NOZZLE	02.002	6	91
69	POWER HARNESS FROM ALTERNATOR TO CONTROL PANEL	6H.907	1	92
70	REAR COWLING	03.023	1	93
71	RUBBER HOSE (82 X 82 X 90 DEG) FOR AIR CLEANER	06.820.01	1	94
72	SENSOR FOR TEMPERATURE GAUGE	46.065.1	1	95
73	SPARES FORHA6TC ENGINE	06.1047.1	1	96
74	SPEED ADJUSTING UNIT (FIXED SPEED) S/F VERTICAL PUMP MOUNTED STOP SOLENOID	03.065.1	1	97
75	STAMFORD ALTERNATOR UC2244G,75KVA,220V,60HZ,3PH., SAE-3/11.5"	06.1238	1	98 TO 104
76	STARTER MOTOR12V,3KW MICO MAKE FOR HA6 SERIES	06.033	1	105
77	STD CONTROL PANEL ASSEMBLY WITH DSE 6120 MKII & GEMS SENSOR (FOR OPEN SAUDI) 75 KVA 220 V 3PH 60 HZ	06.1721.1	1	106 TO 112
78	STICKER FOR "KG75A"	02.710.68	1	113
79	STICKER FOR GENSET.	02.402	1	114
80	STOP SOLENOID 12VDC, S/F FUEL PUMP MOUNTED&C TYPE LEVER FOR HA SERIES ENGINE	02.663	1	115
81	SUCTION TUBE(FOR PRESSED SUMP)	06.555	1	116
82	SUPRABHA BAG DIMN LxWxH (2350 x 1200 x 1550)	2H.450.33	1	117
83	TACHODRIVE ARRANGEMENT	03.117	1	118
84	TOP AIR BAFFLE	06.022	1	119
85	TURBOCHARGER(K26)	06.766	1	120
86	UPPER COWLING	06.029	1	121
87	V BELT (A-47)	04.140	1	122
88	V BELT FAILURE SWITCH(KHD-224 5023)	04.106	1	123
89	VALVE MECHANISM ** SUITABLE FOR -30? C	02.024	6	124 TO 126
90	SET OF JOINTS	06.1007.10	1	127
91	SET OF WASHERS	06.1007.11	1	128
92	SET OF 'O' RINGS	06.1007.12	1	129,130
93	SET OF BEARINGS		1	131

NOTE: - AS CONTINUOUS IMPROVEMENTS ARE CONTEMPLATED THE ILLUSTRATION AND DESCRIPTIONS ARE NOT BINDING.

TITLE: -ADAPTOR AND BRACKET FOR TURBOCHARGER	**GROUP: -** 06.765

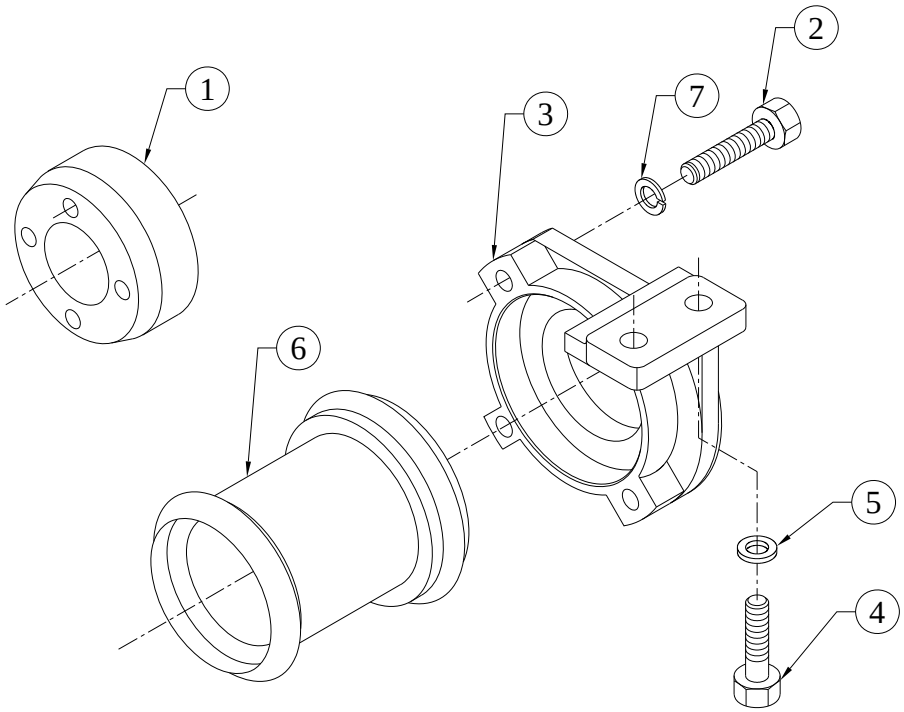

SR.NO.	PART NO.	DESCRIPTION	QTY.	REMARKS
1	4H.130.06.0.00	ADAPTOR RING ON K26 TURBOCHARGER	1	
2	50.011.08.016.	SOCKET HEAD SCREW - M8X1.25X16 - 8.8	4	
3	06.765.01.0.00	BRACKET FOR TURBOCHARGER MOUNTING	1	
4	50.003.10.030.	SET SCREW - M10X1.5X30 - 8.8	2	
5	50.506.10.000.	PLAIN MACHINED WASHER - M10	2	
6	06.765.02.0.00	SWIWEL ADAPTER	1	
7	50.505.08.000.	SPRING WASHER - M8	2	

TITLE: -AIR CLEANER MOUNTING FOR HA67TC WITH K26 TURBO (STAGE2)	**GROUP: -** 06.770.2

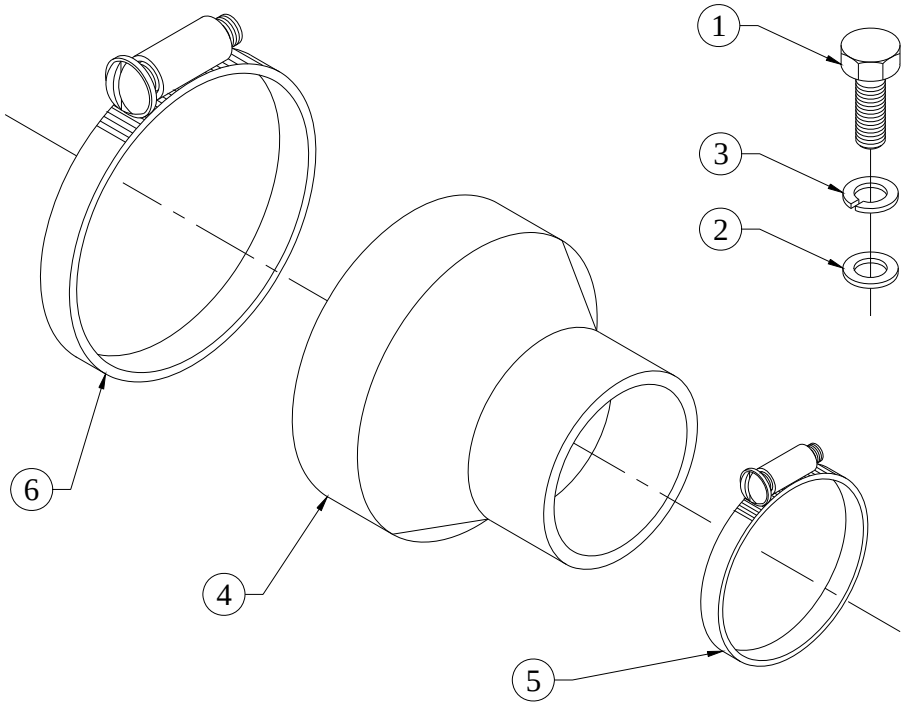

SR.NO.	PART NO.	DESCRIPTION	QTY.	REMARKS
1	50.003.08.020.	SET SCREW - M8X1.25X20 - 8.8	4	
2	50.548.08.000.	SPL.PLAIN M/CED WASHER	4	
3	50.505.08.000.	SPRING WASHER - M8	4	
4	06.770.01.0.00	HOSE FOR AIR CLEANER	1	
5	50.519.10.000.	HOSE CLIP (54 MM) For 39.464.02.0.00	1	
6	50.519.14.000.	WORM DRIVE HOSE CLIP (89 MM)	1	

TITLE: -AIR CLEANER MOUNTING FOR HA6TC WITH K26 TURBOy	**GROUP: -** 06.770.1

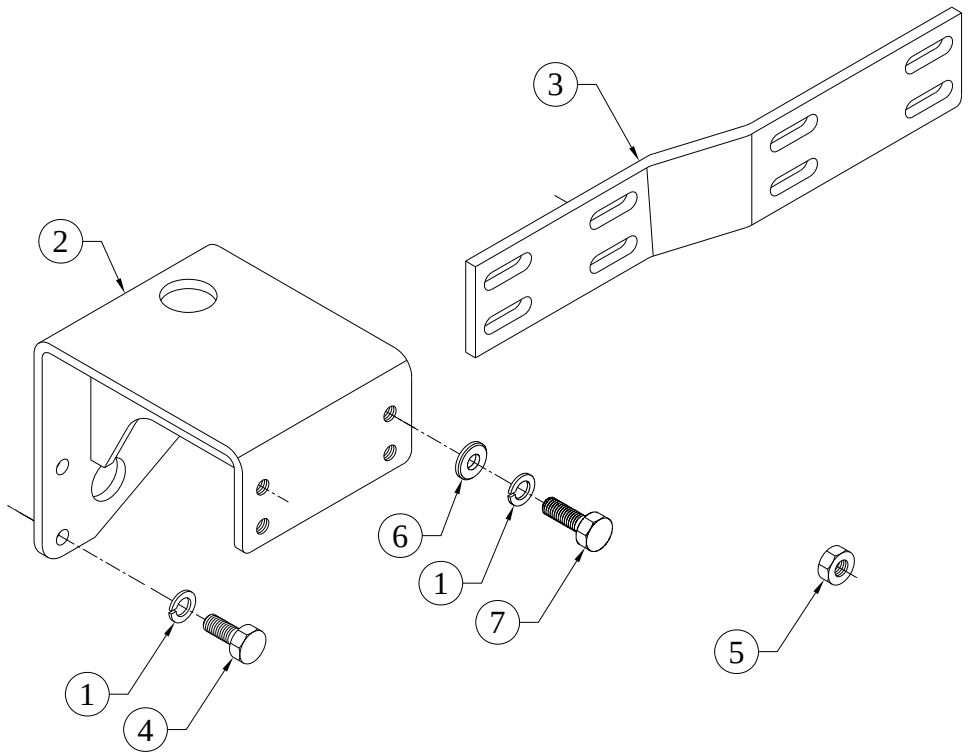

SR.NO.	PART NO.	DESCRIPTION	QTY.	REMARKS
1	50.505.08.000.	SPRING WASHER - M8	5	
2	06.465.01.0.00	BRACKET FOR AIR CLEANER(OIL BATH MTD.)	1	
3	06.770.02.0.00	PLATE FOR AIR CLEANER MOUNTING	1	
4	50.003.08.016.	SET SCREW - M8X1.25X16 - 8.8	1	
5	50.006.08.000.	NUT- M8X1.25 - GR.8	2	
6	50.548.08.000.	SPL.PLAIN M/CED WASHER	4	
7	50.003.08.020.	SET SCREW - M8X1.25X20 - 8.8	4	

TITLE: -12V ALT MTG ARRANGEMENT HA694TC/HA494TC	**GROUP: -** 06.326

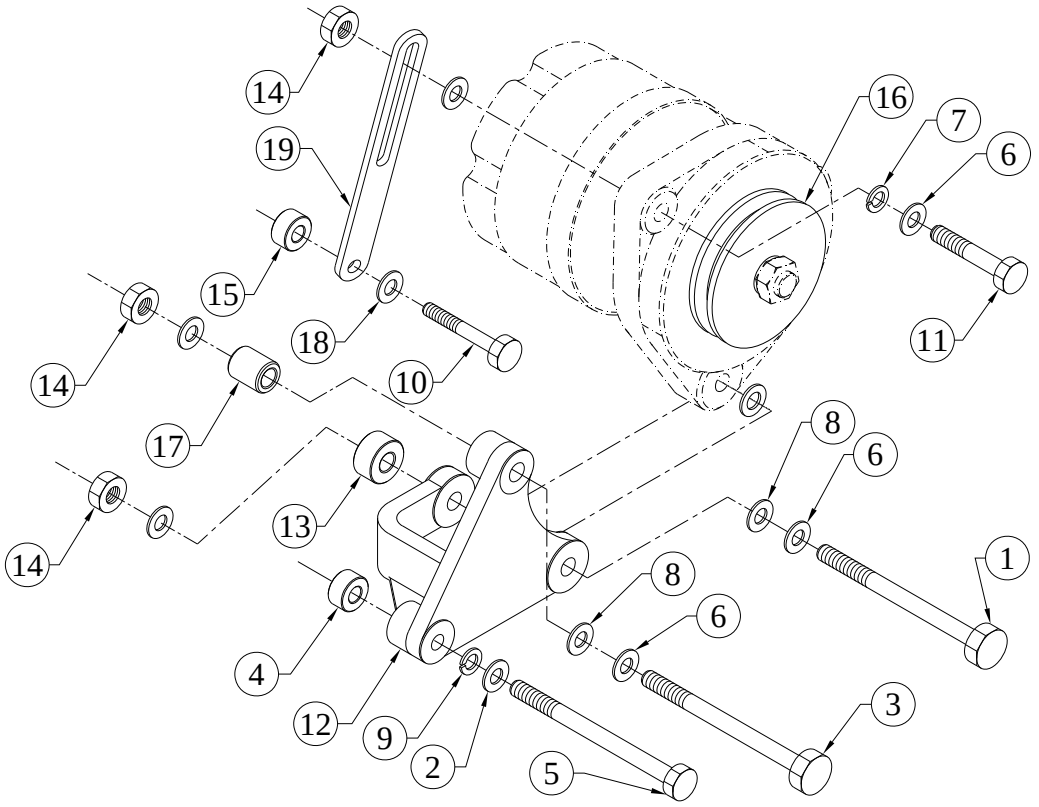

SR.NO.	PART NO.	DESCRIPTION	QTY.	REMARKS
1	50.002.10.115.	SET BOLT - M10X1.5X115 - 8.8	1	
2	50.506.08.000.	PLAIN MACHINED WASHER - M8	1	
3	50.002.10.150.	SET BOLT - M10X1.5X150 - 8.8	1	
4	03.149.02.0.00	SPACER(11 X 20 X 6.5 L)	1	
5	50.002.08.130.	HEXAGONAL HEADED BOLT - M8 X 130L	1	
6	50.548.10.000.	SPECIAL PLAIN WASHER - M10	5	
7	50.505.10.000.	SPRING WASHER - M10	3	
8	50.506.10.000.	PLAIN MACHINED WASHER - M10	2	
9	50.505.08.000.	SPRING WASHER - M8	1	
10	50.002.08.085.	SET BOLT - M8X1.25X85 - 8.8	1	
11	50.002.10.050.	SET BOLT - M10X1.5X50 - 8.8	1	
12	06.326.03.0.00	BRACKET FOR ALTERNATOR	1	
13	06.326.05.0.00	SPACER FOR BRACKET	1	
14	50.006.10.000.	NUT - M10X1.5 - GR.8	3	
15	06.326.04.0.00	SPACER FOR BRACKET	1	
16	03.149.01.0.00	ALTERNATOR PULLEY F (81 PCD)	1	
17	06.326.09.0.00	BUSH	1	
18	50.548.08.000.	SPL.PLAIN M/CED WASHER	1	

TITLE: -12V ALT MTG ARRANGEMENT HA694TC/HA494TC	**GROUP: -** 06.326

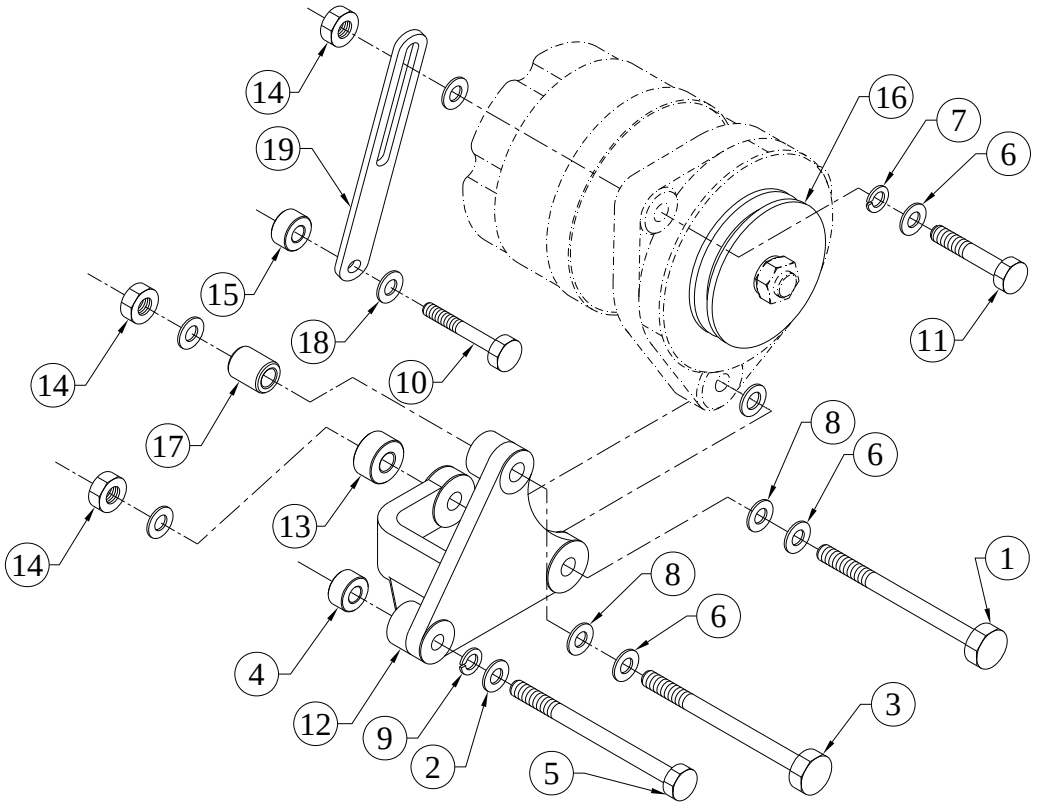

SR.NO.	PART NO.	DESCRIPTION	QTY.	REMARKS
19	06.326.13.0.00	TENSION LEVER	1	

TITLE: - CHARGING ALTERNATOR 12V	**GROUP: -** 3H.315.2

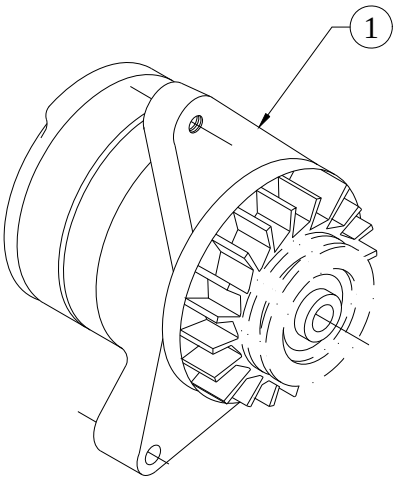

SR.NO.	PART NO.	DESCRIPTION	QTY.	REMARKS
1	3H.315.03.0.PR	CHARGING ALTERNATOR 35A, MICO MAKE K1 MODEL 13.5V REGULATOR WITH BATTERY SENSING	1	

TITLE: - ASSEMBLY OF CAM SHAFT FOR HA US TIER 1 ENGINE	**GROUP: -**06.738

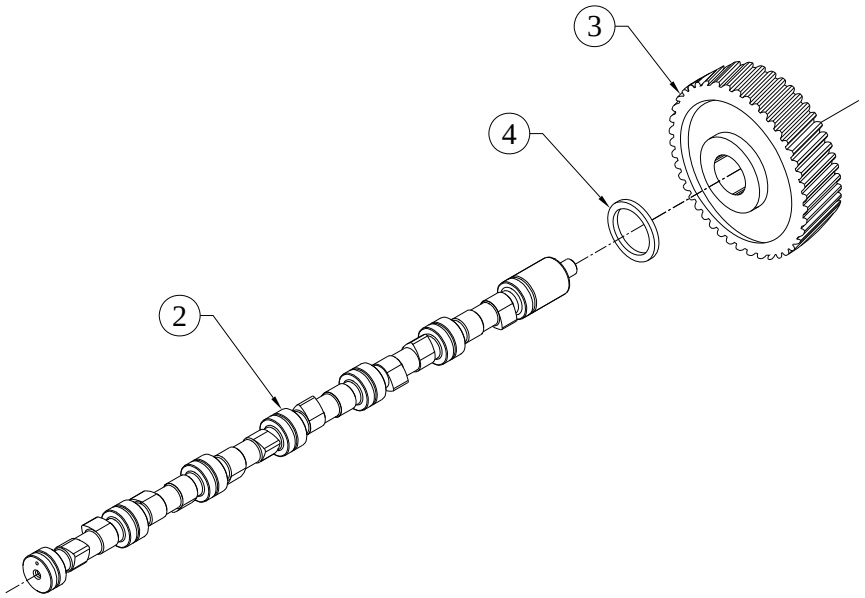

SR.NO.	PART NO.	DESCRIPTION	QTY.	REMARKS
*1	06.738.10.0.00	CAM SHAFT AND GEAR ASSEMBLY	1	CONSISTING OF SR. NO. 2 & 3
2	06.738.01.0.00	CAM SHAFT FOR HA US TIER 1 ENGINE	1	NOT SUPPLIED LOOSE
3	03.006.04.0.00	CAM SHAFT GEAR	1	NOT SUPPLIED LOOSE
4	03.006.02.0.00	THRUST WASHER (FOR CAMSHAFT)	1	NOT SUPPLIED LOOSE

TITLE: -BANDED WRAPPED BELT 2JA51 (1328 MM PITCH LENGTH)	**GROUP: -** 06.032

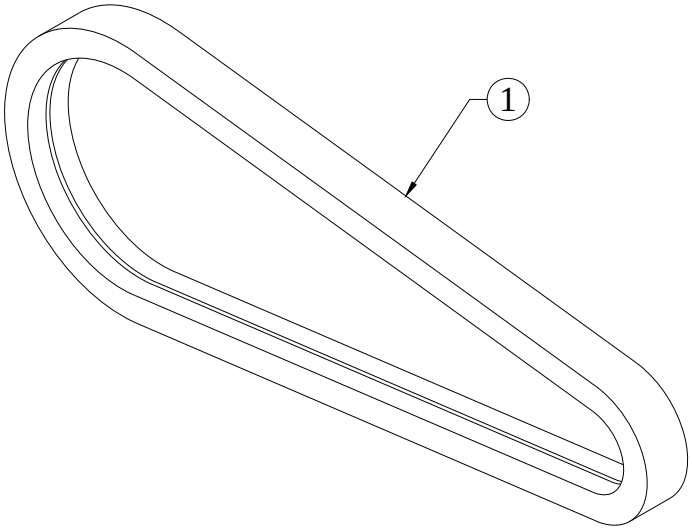

SR.NO.	PART NO.	DESCRIPTION	QTY.	REMARKS
1	06.032.03.0.00	BANDED COGGED BELT (2JAX51 - LP -1326)	1	

TITLE: -BASE PLATE FOR HA6 & HA6TC STANDARDIZATION	**GROUP: -**06.1042

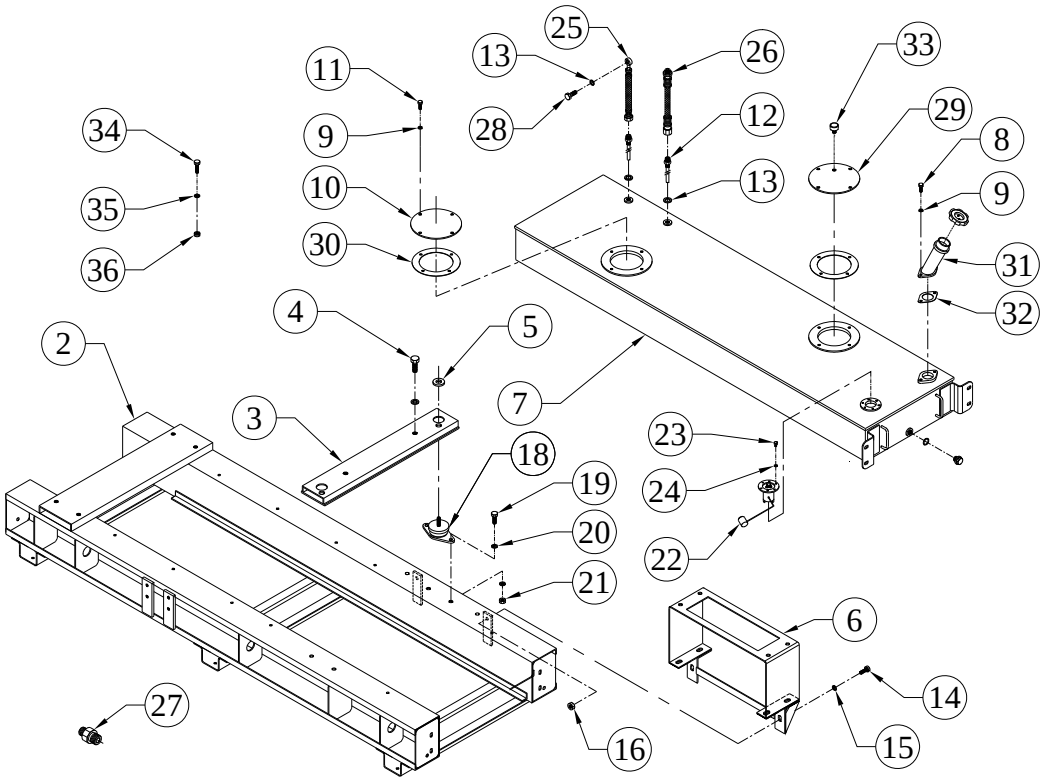

SR.NO.	PART NO.	DESCRIPTION	QTY.	REMARKS
*1	06.1042.10.0.00	ASSEMBLY OF BASE PLATE & FUEL TANK FOR HA6 & HA6TC STANDARDIZATION	1	CONSISTING OF SR.NO. 2 TO 17
2	06.1042.01.0.00	BASE PLATE FOR HA6 & HA6TC STANDARDIZATION	1	
3	06.1042.04.0.00	ALTERNATOR MOUNTING SUPPORT FOR HA6 & HA6TC POEN GENSET	1	
4	50.003.16.035.	SET SCREW - M16X2X35 - 8.8	2	
5	F6.811.04.0.00	HARD WASHER (ID 17,OD 35,THK 5)	2	
6	2H.225.16.0.00	BRACKET FOR CONTROL PANEL MTG	1	
7	06.1042.02.0.00	110 LTR FUEL TANK FOR HA6 & HA6TC OPEN GENSET	1	
8	50.003.08.015.	SET SCREW - M8X1.25X15 - 8.8	2	
9	50.506.08.000.	PLAIN MACHINED WASHER - M8	10	
10	49.386.07.0.00	COVER FOR FUEL TANK	1	

TITLE: -BASE PLATE FOR HA6 & HA6TC STANDARDIZATION	**GROUP: -**06.1042

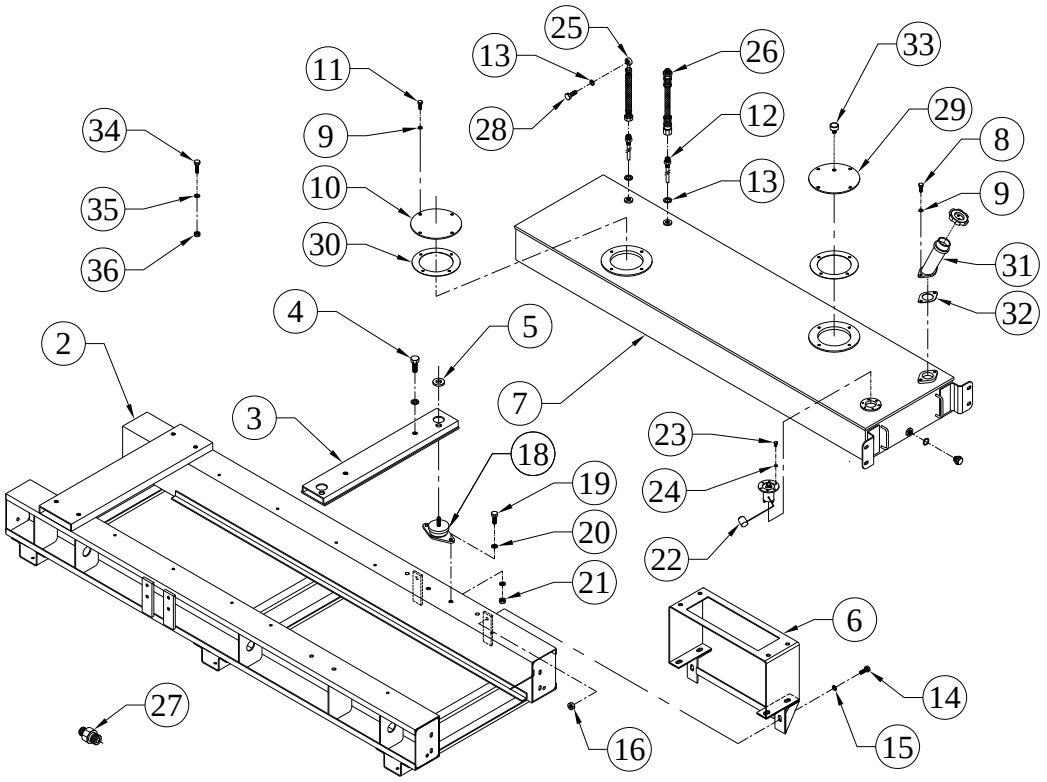

SR.NO.	PART NO.	DESCRIPTION	QTY.	REMARKS
11	50.003.08.020.	SET SCREW - M8X1.25X20 - 8.8	8	
12	3H.173.04.0.00	INLET AND OUTLET CONNECTION FOR (150mm)	2	
13	50.508.12.000.	COPPER WASHER (14X20)	3	
14	50.003.10.030.	SET SCREW - M10X1.5X30 - 8.8	4	
15	50.548.10.000.	SPECIAL PLAIN WASHER - M10	8	
16	50.006.10.000.	NUT - M10X1.5 - GR.8	4	
*17	84.000.08.4.10	CANOPY NAME PLATES	2	NOT ILLUSTRATED
18	02.492.01.0.00	ANTIVIBRATION MOUNT. KG150	4	
19	50.003.12.030.	SET SCREW - M12X1.75X30 - 8.8	8	
20	50.506.12.000.	PLAIN MACHINED WASHER - M12	12	
21	50.006.12.000.	NUT - M12X1.75 - GR.8	8	
22	4H.585.14.0.00	LFL SENSOR(LOW FUEL LEVEL) 145 MM HIGHT	1	
23	50.077.05.016.	S.S.HEX BOLT M5x16	6	
24	50.506.05.000.	PLAIN MACHINED WASHER - M5	6	

TITLE: -BASE PLATE FOR HA6 & HA6TC STANDARDIZATION	**GROUP: -**06.1042

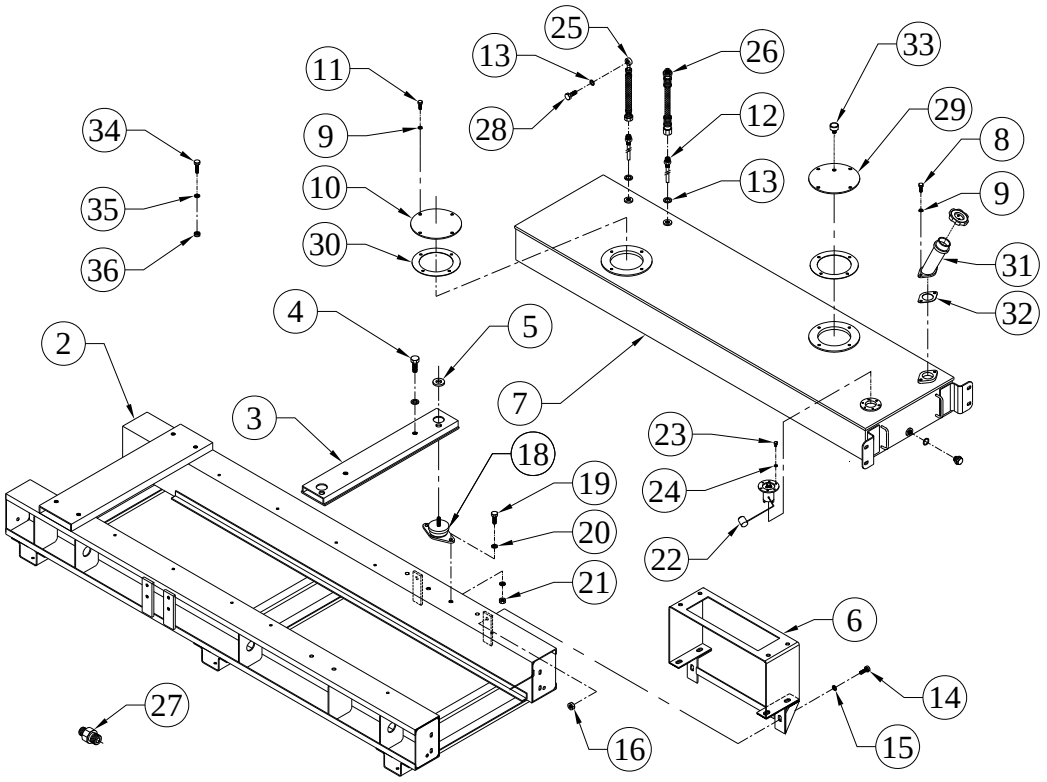

SR.NO.	PART NO.	DESCRIPTION	QTY.	REMARKS
25	3H.181.04.0.00	FUEL PIPE (INLET)M12*1.5MAI PLUG *M16*1.5 UNION FOR 10 TO 125 KVA TRAILER MOUNTED (550 mm LENGTH)	1	
26	3H.181.02.0.00	FUEL RETURN PIPE (20 & 25 KVA TRAILER MOUNTED GENSET) LENGTH 700 MM	1	
27	4H.486.05.0.00	ADAPTOR M14 X M16 U	1	
28	50.504.04.000.	BANJO BOLT - M14X1.5	3	
29	KV2.515.02.0.00	COVER PLATE FOR FUEL TANK (S/F BREATHER)	1	
30	03.774.04.0.00	JOINT FOR COVER(AUX.L.O.SUMP)	2	
31	3H.283.05.0.00	SPOUT FOR FUEL FILLING	1	
32	4H.039.02.0.00	JOINT FOR W.I.CONN.& THERMO.HSG.	1	
33	3H.173d .05.0.00	BREATHER FOR FUEL TANK	1	
34	50.003.10.030.	SET SCREW - M10X1.5X30 - 8.8	6	
35	50.548.10.000.	SPECIAL PLAIN WASHER - M10	12	

TITLE: -BASE PLATE FOR HA6 & HA6TC STANDARDIZATION	**GROUP: -**06.1042

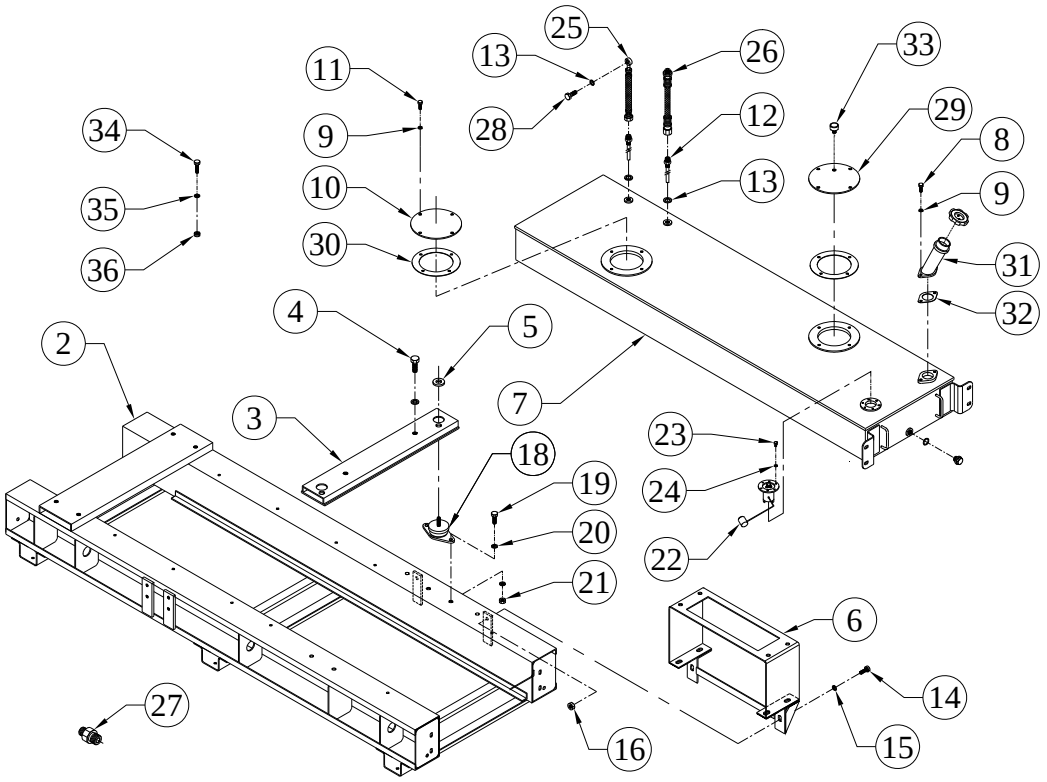

SR.NO.	PART NO.	DESCRIPTION	QTY.	REMARKS
36	50.006.10.000.	NUT - M10X1.5 - GR.8	6	36

TITLE: -BATTERY BRACKET FOR HA OPEN STANDARD GENSET	**GROUP: -** 4H.1189.3

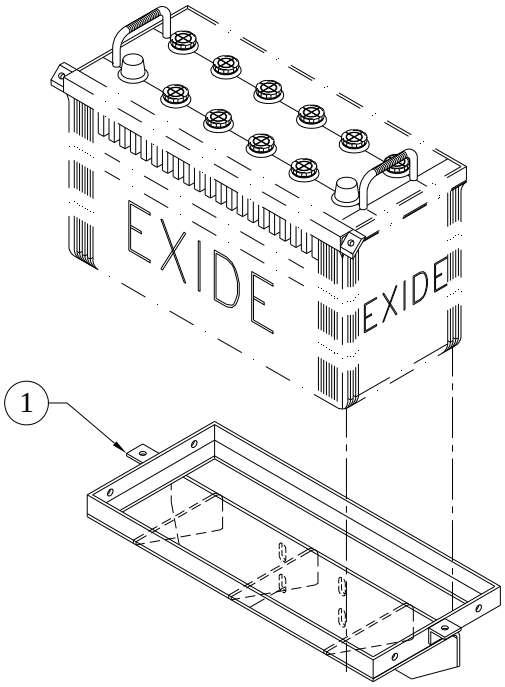

SR.NO.	PART NO.	DESCRIPTION	QTY.	REMARKS
1	4H.1189.02.0.00	BATTERY BRACKET FOR 4R TO 6RTA OPEN SET VISA ENERGY PROJECT	1	

TITLE :- BELT GUARD (STAGE-1)	**GROUP: -** 06.372.1

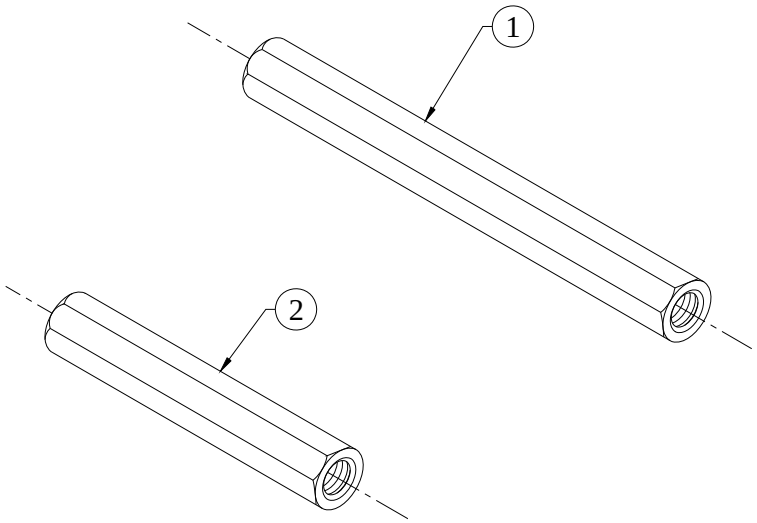

SR.NO.	PART NO.	DESCRIPTION	QTY.	REMARKS
1	06.063.03.0.00	SPACER FOR BELT GUARD (ON FRONT COVER119.5L)	1	
2	06.063.04.0.00	SPACER FOR BELT GUARD (ON B.T. UNIT 72.5L)	1	

TITLE :- BELT GUARD (STAGE-2)	**GROUP: -** 06.372.2

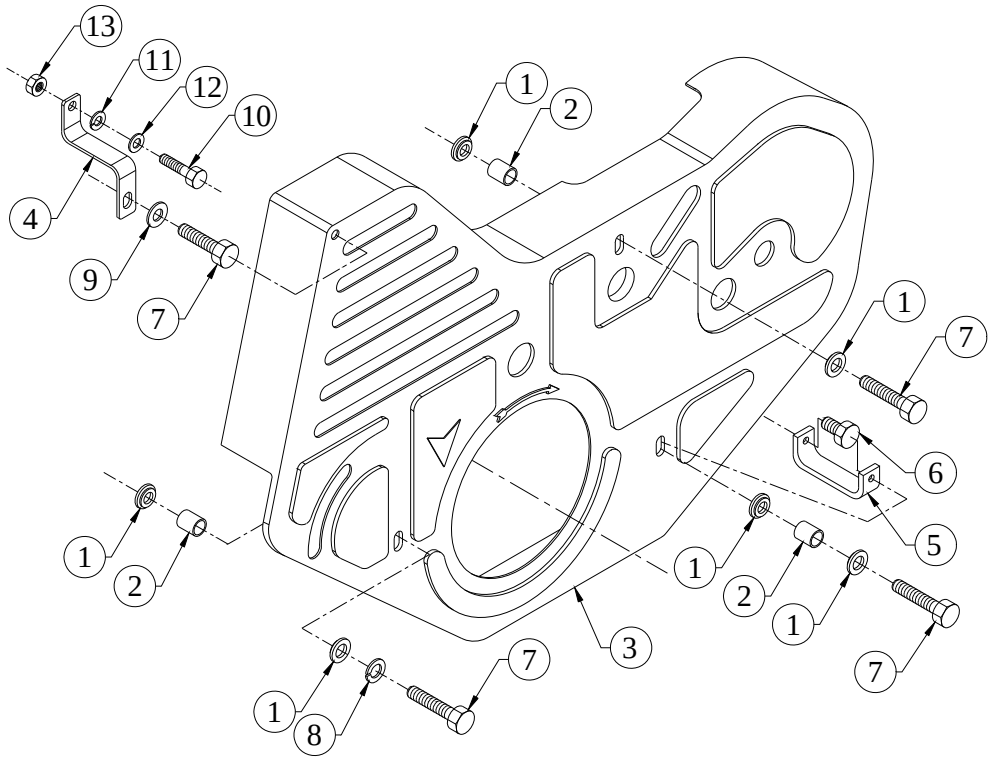

SR.NO.	PART NO.	DESCRIPTION	QTY.	REMARKS
1	02.121.02.0.00	WASHER	6	
2	02.121.03.0.00	SPACER TUBE	3	
3	04.141.01.0.00	BELT GUARD	1	
4	06.063.01.0.00	SUPPORT FOR BELT GUARD ON FAN BODY	1	
5	06.372.01.0.00	C CLAMP	1	
6	50.003.08.016.	SET SCREW - M8X1.25X16 - 8.8	1	
7	50.003.08.020.	SET SCREW - M8X1.25X20 - 8.8	4	
8	50.505.08.000.	SPRING WASHER - M8	1	
9	50.548.08.000.	SPL.PLAIN M/CED WASHER	1	
10	50.003.06.025.	SET SCREW - M6X1X25 - 8.8	1	
11	50.505.06.000.	SPRING WASHER - M6	1	
12	03.023.02.0.00	WASHER	1	
13	50.006.06.000.	NUT - M6X1 - GR.8	1	

TITLE: -BLANKING PLATE FOR HYD PUMP BORE	**GROUP: -** 03.047

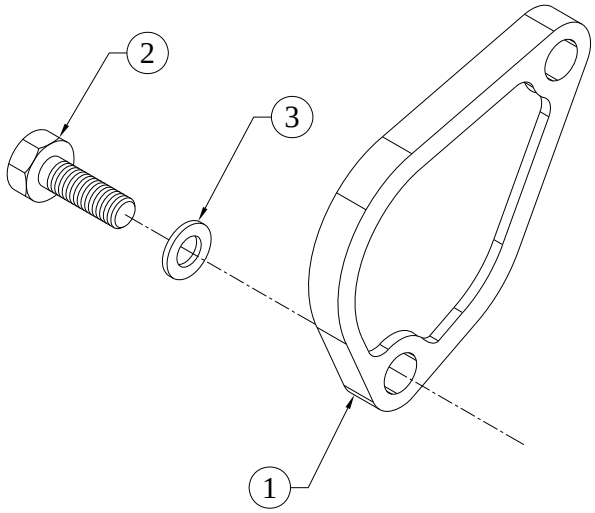

SR.NO.	PART NO.	DESCRIPTION	QTY.	REMARKS
1	03.047.01.0.00	BLANKING PLATE	1	
2	50.003.10.025	SET SCREW - M10X1.5X25 - 8.8	2	
3	50.506.10.000	PLAIN MACHINED WASHER - M10	2	

TITLE: - BOX TYPE BREATHER	**GROUP: -** 04.600

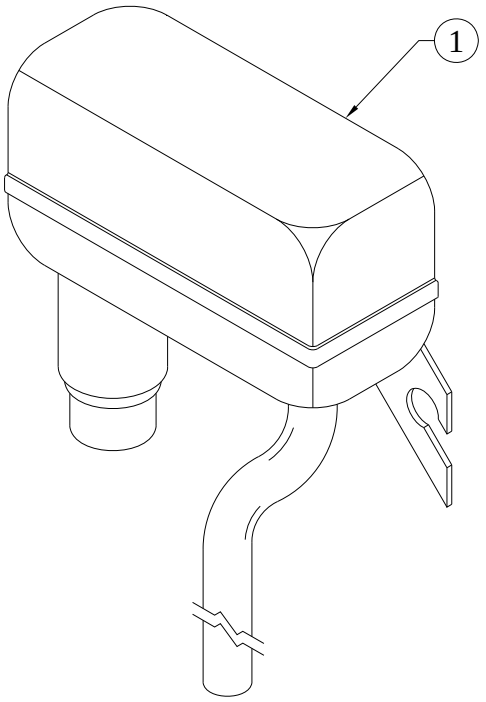

SR.NO.	PART NO.	DESCRIPTION	QTY.	REMARKS
1	04.600.01.0.00	BOX TYPE BREATHER	1	

TITLE: -BT UNIT WITH MODIFIED SHAFT AND 5.5 DIA SPRING	**GROUP: -** 06.973

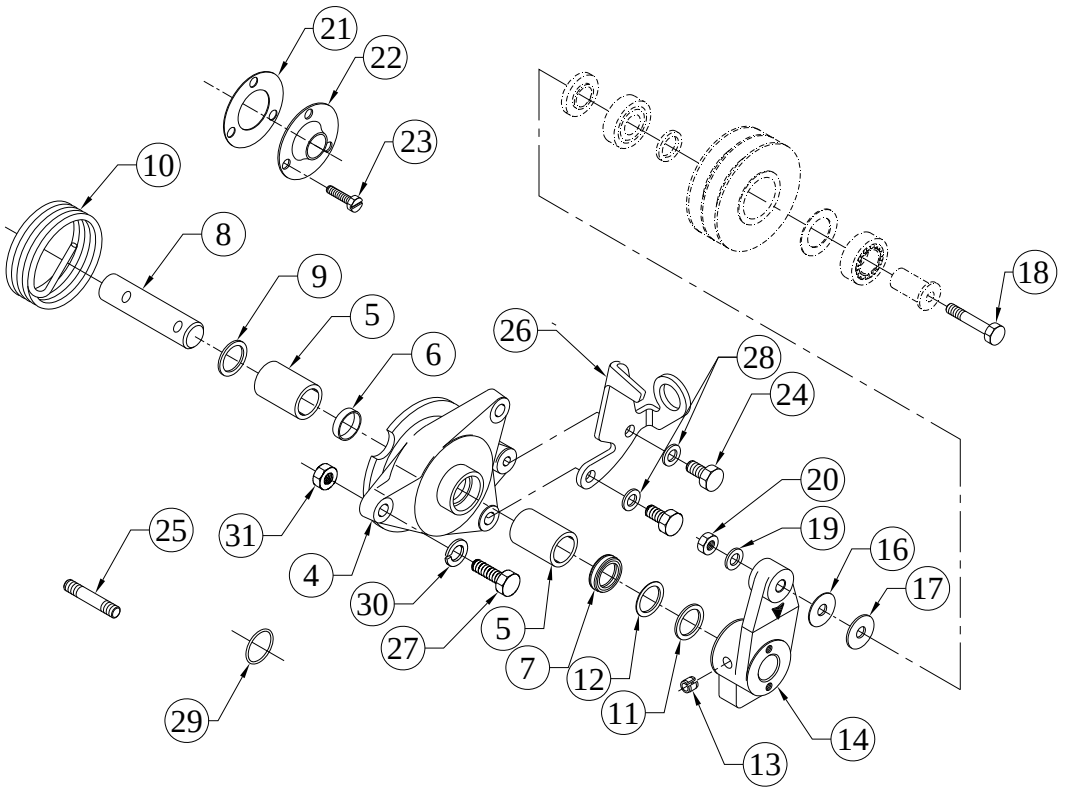

SR.NO.	PART NO.	DESCRIPTION	QTY.	REMARKS
*1	06.973.90.0.00	SUB ASSEMBLY OF B.T UNIT (MODIFIED FOR BANDED COGGED BELT)	1	CONSISTING OF SR.NO. 2,15 TO 23
*2	06.973.120.0.00	SUB ASSEMBLY OF HOUSING AND LEVER (FOR MODIFIED BT UNIT)	1	CONSISTING OF SR.NO. 3,8 TO 14
*3	06.973.10.0.00	SUB ASSEMBLY OF HOUSING AND BUSH (FOR MODIFIED BT UNIT)	1	CONSISTING OF SR.NO. 4 TO 7
4	04.301.15.0.00	HOUSING FOR BELT TENSIONING UNIT	1	NOT SUPPLIED LOOSE
5	02.024.12.0.00	V.R.BUSH	2	NOT SUPPLIED LOOSE
6	04.301.16.0.00	SPACER RING	1	NOT SUPPLIED LOOSE
7	04.301.14.0.00	ROTARY SHAFT LIP SEAL	1	NOT SUPPLIED LOOSE
8	06.447.04.0.00	SHAFT	1	
9	04.301.03.0.00	WASHER	1	

TITLE: -BT UNIT WITH MODIFIED SHAFT AND 5.5 DIA SPRING	**GROUP: -** 06.973

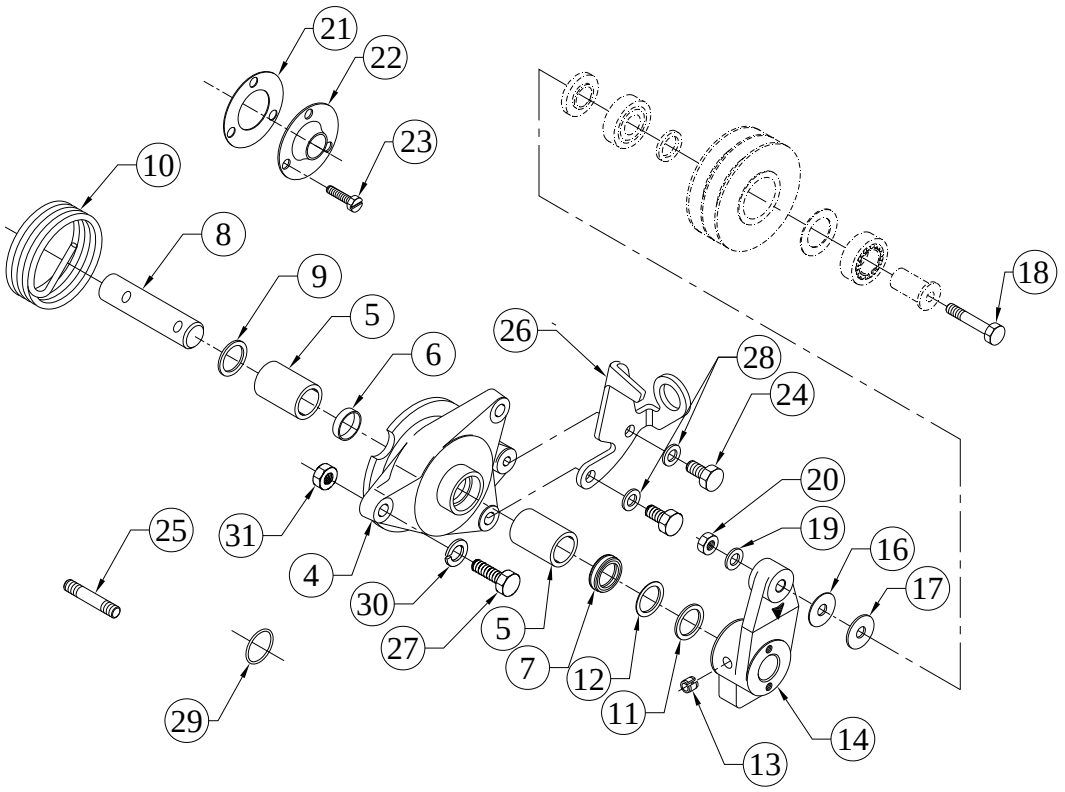

SR.NO.	PART NO.	DESCRIPTION	QTY.	REMARKS
10	04.301.18.0.00	HELICAL TORSION SPRING WITH 5.5 MM WIRE DIA	1	
11	04.301.12.0.00	THRUST WASHER 18 X 32 X 1.5	1	
12	04.301.13.0.00	THRUST WASHER 18.2 X 32 X 0.3	1	
*15	06.973.100.0.00	SUB ASSY OF PULLY	1	NOT ILLUSTRATED
16	06.047.02.0.00	WASHER	1	
17	04.301.09.0.00	WASHER 0.3 THICK	1	
18	50.002.08.075.	SET BOLT - M8X1.25X75 - 8.8	1	
19	10.020.03.0.00	HARD WASHER (F)	1	
20	50.006.08.000.	NUT- M8X1.25 - GR.8	1	
21	03.080.15.0.00	JOINT FOR COVER (B.T.UNIT)	1	
22	03.080.14.0.00	COVER FOR PULLEY	1	
23	50.023.06.015.	SLOTTED CRANK SUNK HEAD SCREW - M6X1X15	3	
24	50.003.08.016.	SET SCREW - M8X1.25X16 - 8.8	1	
25	50.010.08.045.	STUD - M8X1.25X45 - 8.8	1	
26	04.196.02.0.00	BRACKET FOR V BELT SWITCH	1	
27	50.003.08.025.	SET SCREW - M8X1.25X25 - 8.8	2	

TITLE: -BT UNIT WITH MODIFIED SHAFT AND 5.5 DIA SPRING	**GROUP: -** 06.973

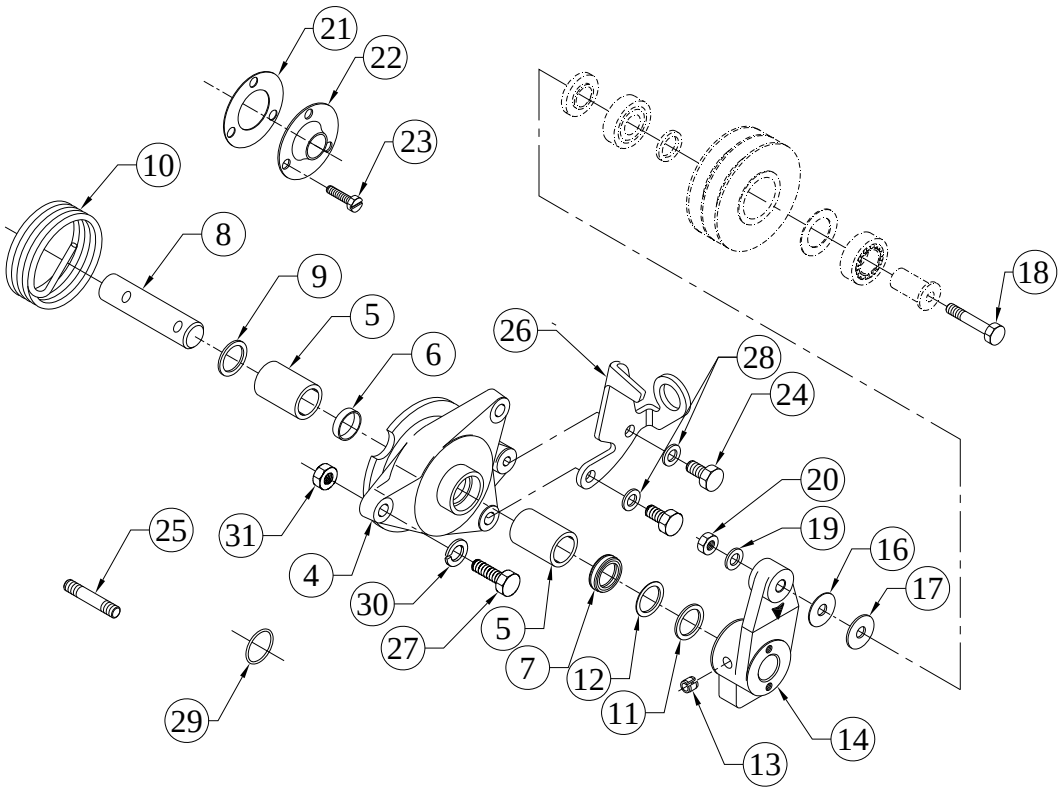

SR.NO.	PART NO.	DESCRIPTION	QTY.	REMARKS
28	50.506.08.000.	PLAIN MACHINED WASHER - M8	2	
29	03.013.11.0.00	O RING (3.2 X 78 SILICON)	1	
30	50.505.08.000.	SPRING WASHER - M8	2	
31	50.006.08.000.	NUT- M8X1.25 - GR.8	1	

TITLE: -CLAMP FOR PRECLEANER	**GROUP: -** 06.048.03

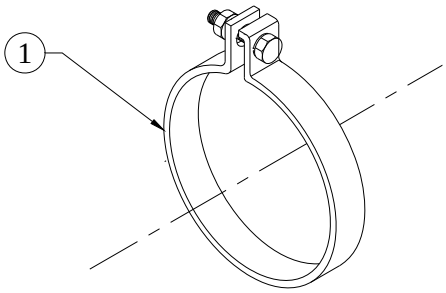

SR.NO.	PART NO.	DESCRIPTION	QTY.	REMARKS
1	06.048.03.0.00	CLAMP FOR PRECLEANER	1	

TITLE: -COMBINED LEAK OFF PIPE ASSLY	**GROUP: -**06.006

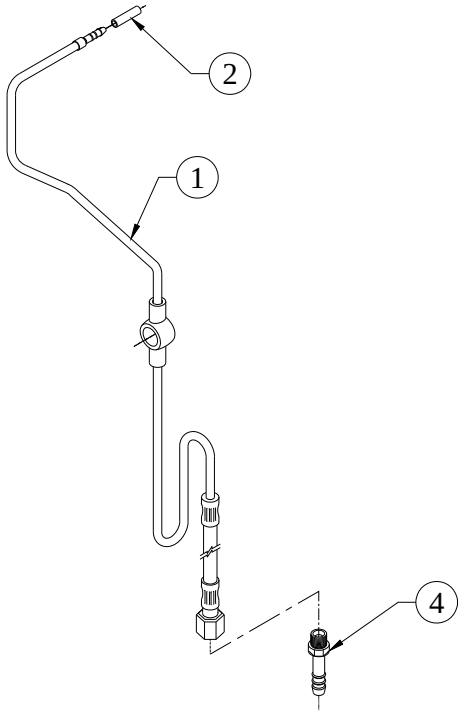

SR.NO.	PART NO.	DESCRIPTION	QTY.	REMARKS
1	06.006.01.0.00	COMBINED LEAK OFF PIPE FOR HA694	1	
2	02.525.06.0.00	FUEL HOSE 5.1/D X 11.5 / 12.7 O	1	
*3	02.500.08.0.00	CONSTANT PRESSURE SPRING BAND HOSE CLAMP KLIPCO NOMINAL SIZE 10 MM	2	NOT ILLUSTRATED
4	06.610.02.0.00	HOSE TAIL FOR FUEL LEAK OFF CONN	1	

TITLE: - CON ROD AND PISTON ASSEMBLY (NA ROD TC PISTON.)	**GROUP: -** 02.533

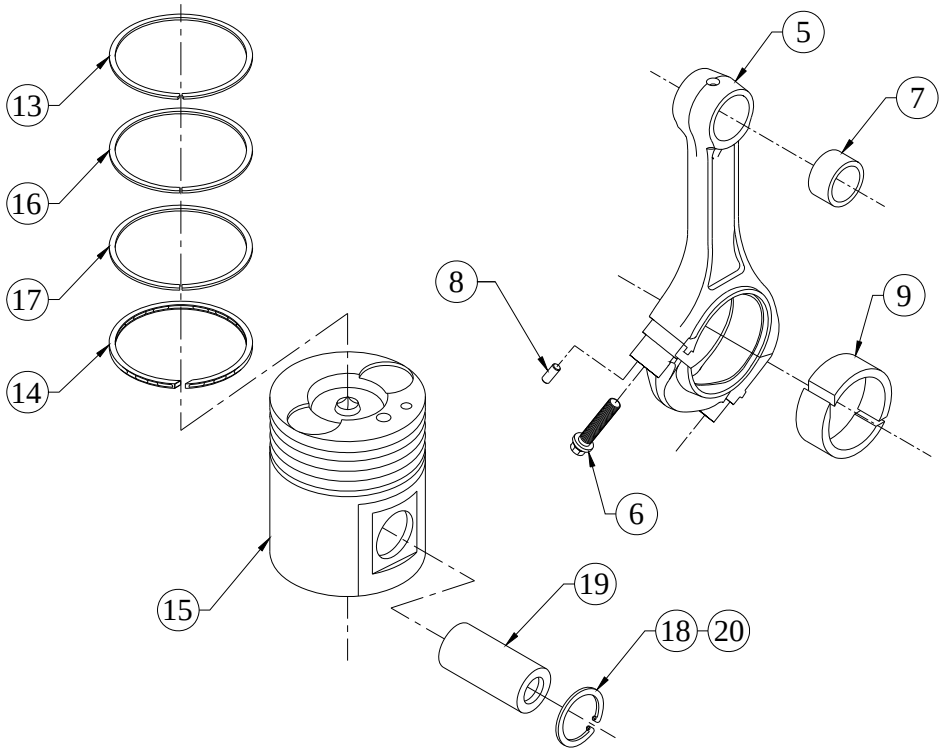

SR.NO.	PART NO.	DESCRIPTION	QTY.	REMARKS
*1	02.533.10.0.00	SUB ASSEMBLY OF CONROD AND PISTON	1	CONSISTING OF SR. NO. 2 TO 20 NOT SUPPLIED ASSEMBLY
*2	04.685...	CONNECTING ROD (DREAM PROJECT)	1	CONSISTING OF SR. NO. 3
*3	04.685.10.0.00	CONNECTING ROD ASSEMBLY	1	CONSISTING OF SR. NO. 4
*4	04.685.20.0.00	CON ROD ASSEMBLY (WITHOUT LE BEARING)	1	CONSISTING OF SR. NO. 5 TO 8
5	04.685.01.0.00	CONNECTING ROD (DREAM PROJECT) MACHINING	1	NOT SUPPLIED LOOSE
6	04.692.03.0.00	CONNECTING ROD BOLT	2	
7	02.021.03.9.00	SMALL END BUSH (S/F)	1	
8	50.401.07.010.	DOWEL PIN	2	
9	04.685.02.0.00	CONNECTING ROD BIG END BEARING(NA)	2	NOT SUPPLIED LOOSE

TITLE: - CON ROD AND PISTON ASSEMBLY (NA ROD TC PISTON.)	**GROUP: -** 02.533

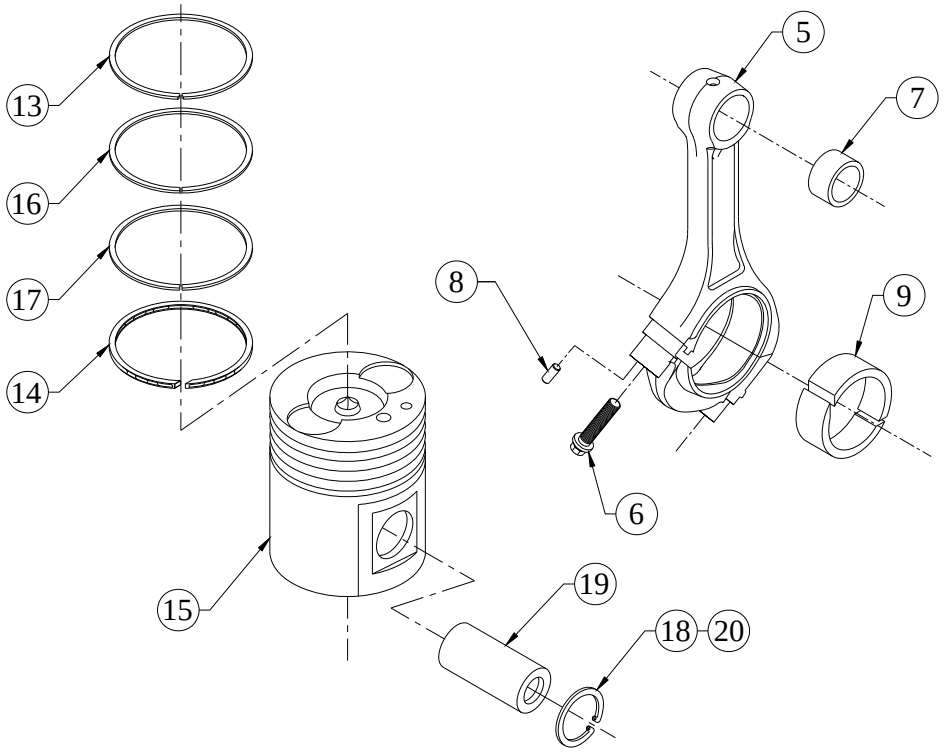

SR.NO.	PART NO.	DESCRIPTION	QTY.	REMARKS
*10	02.182...	PISTON (TURBOCHARGED)	1	CONSISTING OF SR. NO. 11
*11	02.182.10.0.00	PISTON COMPLETE	1	CONSISTING OF SR. NO. 12, 19 & 20
*12	02.182.20.0.00	PISTON WITH PISTON RINGS (TURBOCHARGED)	1	CONSISTING OF SR. NO. 13 TO 18
13	02.020.03.0.00	PISTON RING TOP	1	NOT SUPPLIED LOOSE
14	02.020.05.0.00	OIL CONTROL RING	1	NOT SUPPLIED LOOSE
15	02.182.01.0.00	PISTON (ALCAN)	1	NOT SUPLIED LOOSE
16	02.182.11.0.00	COMPRESSION RING (I/B)	1	NOT SUPPLIED LOOSE
17	02.182.12.0.00	NAPIER RING	1	NOT SUPPLIED LOOSE
18	50.502.35.000.	CIRCLIP (INTERNAL)-35 MM	1	
19	02.020.02.0.00	PISTON PIN	1	
20	50.502.35.000.	CIRCLIP (INTERNAL)-35 MM	1	

TITLE: -COOLING AIR BLOWER WITH FAN PULLEY (90PCD, A SECTION, 2 GROOVES)	**GROUP: -** 06.085

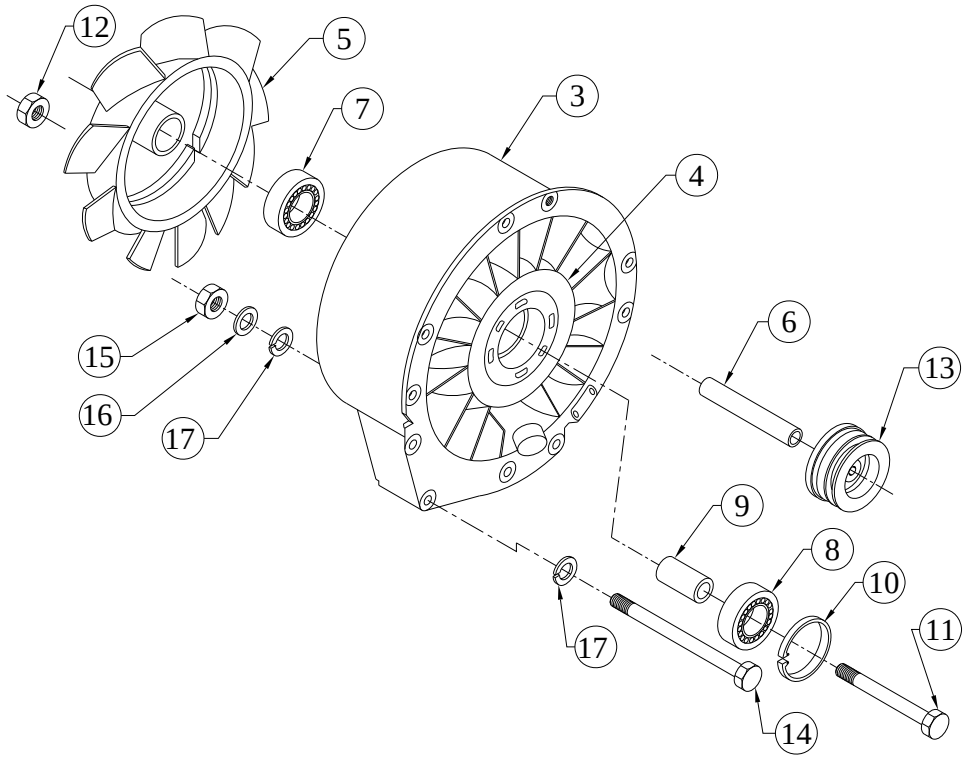

SR.NO.	PART NO.	DESCRIPTION	QTY.	REMARKS
*1	06.085.60.0.00	SUB ASSEMBLY OF FAN BODY, STATOR AND IMPELLER	1	CONSISTING OF SR. NO. 2 & 5 TO 12
*2	06.085.50.0.00	ASSLY OF FAN BODY & STATOR VANE	1	CONSISTING OF SR.NO.3 & 4
3	06.085.06.0.00	FAN BODY (HA 6)	1	
4	06.085.01.0.00	STATOR VANE	1	
5	06.085.20.0.00	IMPELLER	1	
6	06.025.03.0.00	ROTOR SHAFT	1	
7	06.025.13.0.00	BALL BEARING(25X52X15) 6205Z,C3	1	
8	06.085.05.0.00	BALL BEARING(25X62X17) 6305Z,C3	1	
9	06.085.04.0.00	BUSH (SPACER) (BAR)	1	
10	50.502.62.000.	CIRCLIP INTERNAL - 62 MM	1	
11	50.002.12.180.	SET BOLT - M12X1.75X180 - 8.8	1	
12	50.006.12.000.	NUT - M12X1.75 - GR.8	1	

TITLE: -COOLING AIR BLOWER WITH FAN PULLEY (90PCD, A SECTION, 2 GROOVES)	**GROUP: -** 06.085

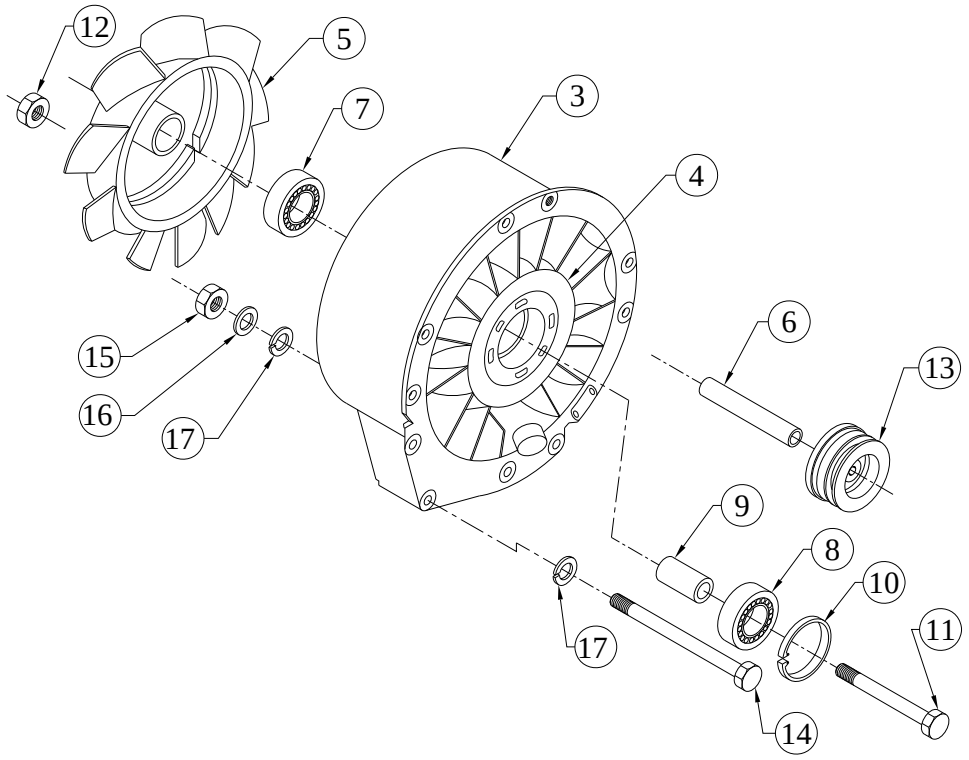

SR.NO.	PART NO.	DESCRIPTION	QTY.	REMARKS
13	06.085.12.0.00	FAN PULLEY (90 PCD A SECTION, 2 GROOVES -- FOR BANDED COGGED BELTS)	1	
14	50.002.08.120.	SET BOLT - M8X1.25X120 - 8.8	4	
15	50.006.08.000.	NUT- M8X1.25 - GR.8	1	
16	50.506.08.000.	PLAIN MACHINED WASHER - M8	5	
17	50.505.08.000.	SPRING WASHER - M8	1	

TITLE: -CRANK CASE (S/F L.O.CONN. TO FUEL PUMP)	**GROUP: -** 06.440

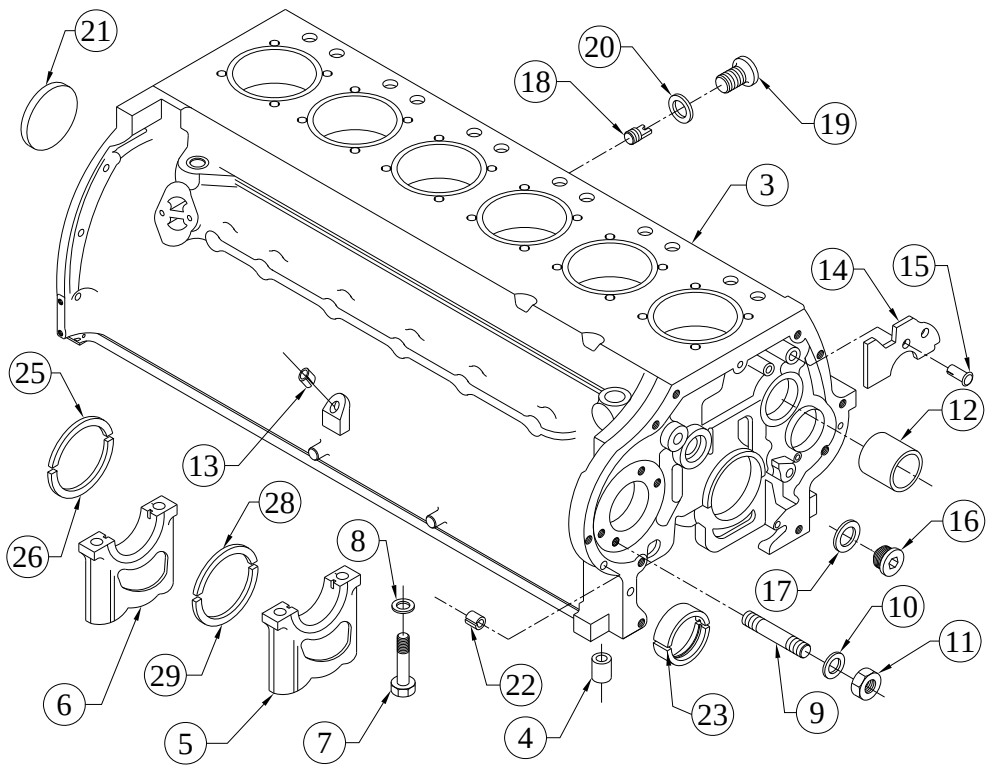

SR.NO.	PART NO.	DESCRIPTION	QTY.	REMARKS
*1	06.001.50.0.00	CRANKCASE ASSLY W/O BEARINGS(KHD)	1	CONSISTING OF SR NO 2 & 9 TO 22
*2	06.001.40.0.00	CRANKCASE & CAP ASSLY(KHD)	1	CONSISTING OF SR NO. 3 TO 8
3	06.001.08.0.00	CRANK CASE LIGHT WEIGHT (WITH BELL HOUSING)	1	NOT SUPPLIED LOOSE
4	B2.005.16.0.00	HOLLOW DOWEL(M.B.CAP)	14	
5	03.001.23.8.00	BEARING CAP FWE - S/Finish (Without R.Bore)	1	NOT SUPPLIED LOOSE
6	03.001.24.8.00	BEARING CAP GE - S/finish (Without R.Bore)	6	NOT SUPPLIED LOOSE
7	03.001.22.0.00	BOLT FOR MB CAP(HEX HEAD) M14X2X128	14	
8	02.001.04.0.00	SPECIAL WASHER FOR M14 BOLT	14	
9	03.001.12.0.00	PRECOATED STUD (FOR FUEL PUMP MOUNTING)	4	
10	03.001.25.0.00	WASHER(FOR FUEL PUMP MTG)	4	
11	50.006.10.000.	NUT - M10X1.5 - GR.8	4	

TITLE: -CRANK CASE (S/F L.O.CONN. TO FUEL PUMP)	**GROUP: -** 06.440

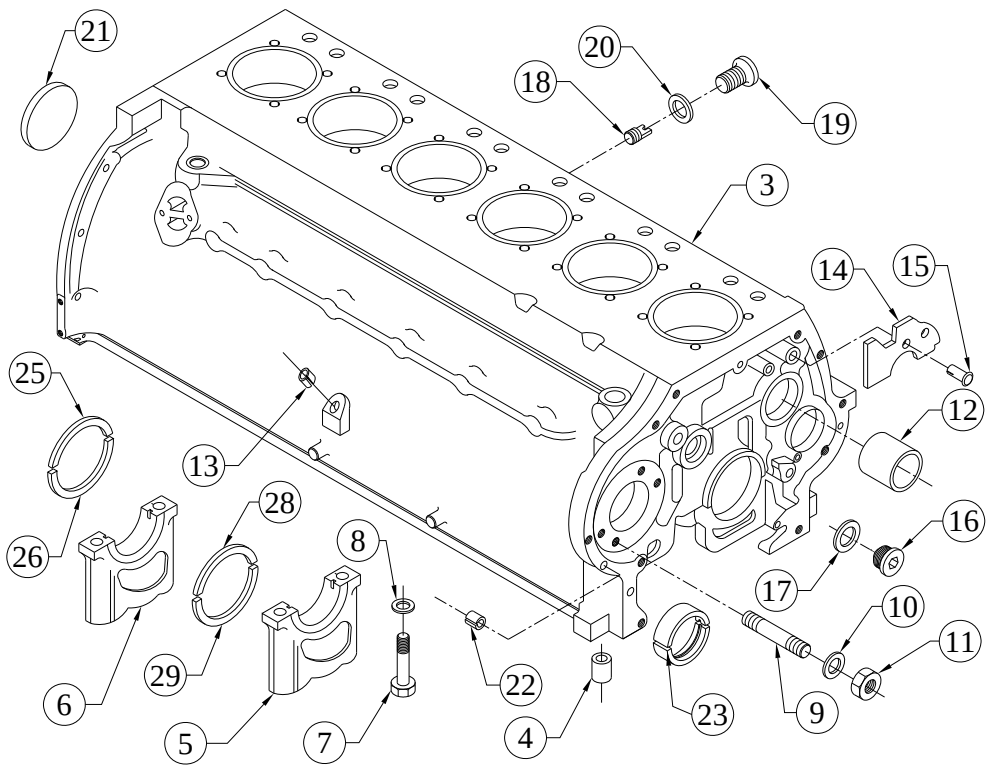

SR.NO.	PART NO.	DESCRIPTION	QTY.	REMARKS
12	03.001.04.0.00	CAM BUSH	1	
13	02.037.04.0.00	DIPSTICK GUIDE	1	
14	02.519.06.0.00	DEFLECTOR PLATE (HA - LIGHT WEIGHT C'CASE)	1	
15	50.543.09.010.	NOTCHED PIN	2	
16	04.001.08.0.00	PRECOATED SCREW PLUG	2	
17	50.508.18.000.	COPPER WASHER (20X24)	2	
18	03.001.07.0.00	SLOTTED PIN	7	
19	4H.001.22.0.00	PRECOATED PLUG	8	
20	50.508.10.000.	COPPER WASHER (12X18)	8	
21	02.001.13.0.00	DISC PLUG	1	
22	02.001.14.0.00	SPLIT BUSH	2	
23	02.001.07.0.00	MAIN BRG TOP & BOTTOM	7	REFER TO SET OF BEARINGS INDEX PAGE
*24	03.001.18.0.00	THRUST RING PAIR -DRIVE END, 102 DIA.)	1	CONSISTING OF SR NO 25 & 26
25	03.001.19.0.00	THRUST WASHER -DRIVE END,TOP	1	

TITLE: -CRANK CASE (S/F L.O.CONN. TO FUEL PUMP)	**GROUP: -** 06.440

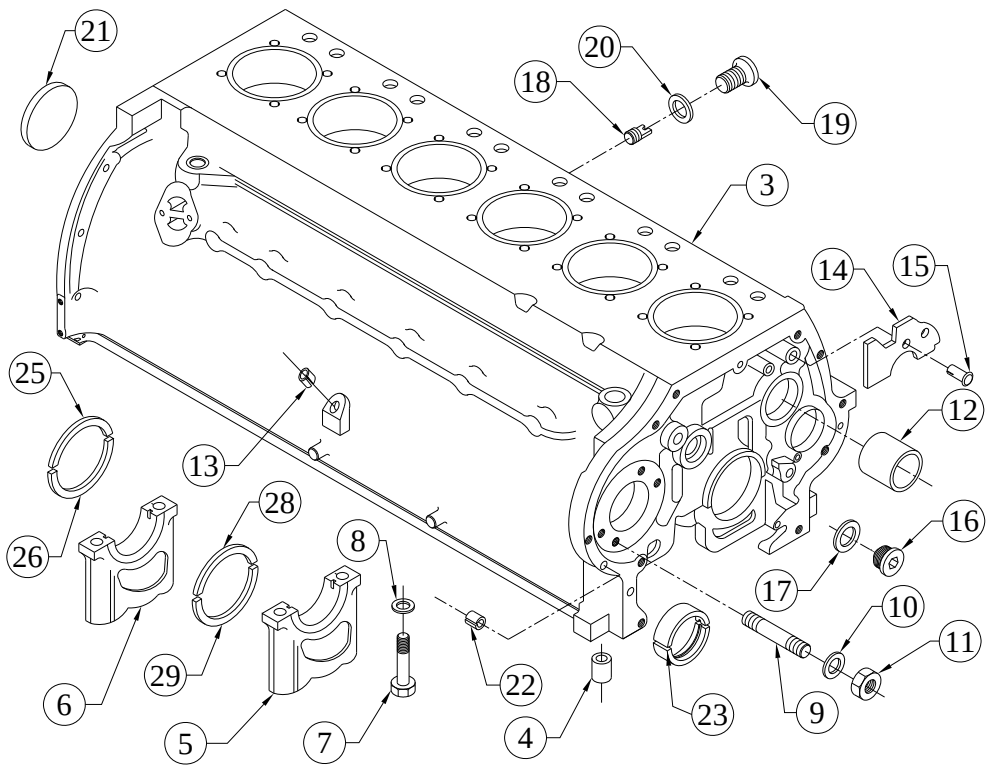

SR.NO.	PART NO.	DESCRIPTION	QTY.	REMARKS
26	03.001.21.0.00	THRUST WASHER (DRIVE END,BOTTOM)	1	
*27	B2.005.22.0.00	THRUST RING PAIR-G.E.	1	CONSISTING OF SR NO 28 & 29
28	B2.005.18.0.00	THRUST RING HALF(G.E.-TOP)	1	
29	B2.005.19.0.00	THRUST RING HALF (G.E.-BOTTOM)	1	

TITLE: - CRANK PULLEY 238 PCD 3 GR W/O DAMPER	**GROUP: -** 04.334

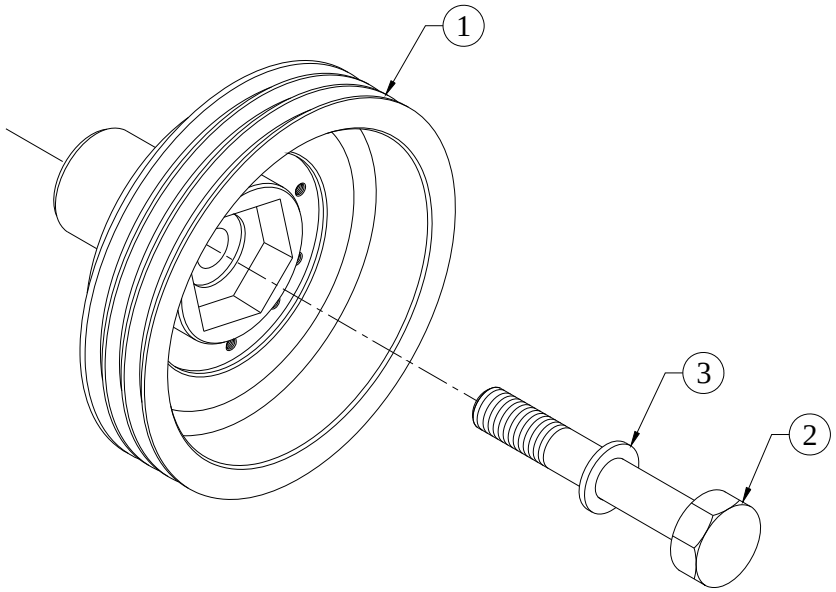

SR.NO.	PART NO.	DESCRIPTION	QTY.	REMARKS
1	04.334.05.0.00	CRANK PULLEY(238 PCD,3 GR,A SECT)HA494TC(MODIFIED FOR BANDED BELT)	1	
2	03.016.02.0.00	CRANK PULLY BOLT-UPDATED	1	
3	03.016.03.0.00	WASHER(FOR CRANK PULLY BOLT)-UPDATED	1	

TITLE: - CRANK SHAFT	**GROUP: -** 06.004

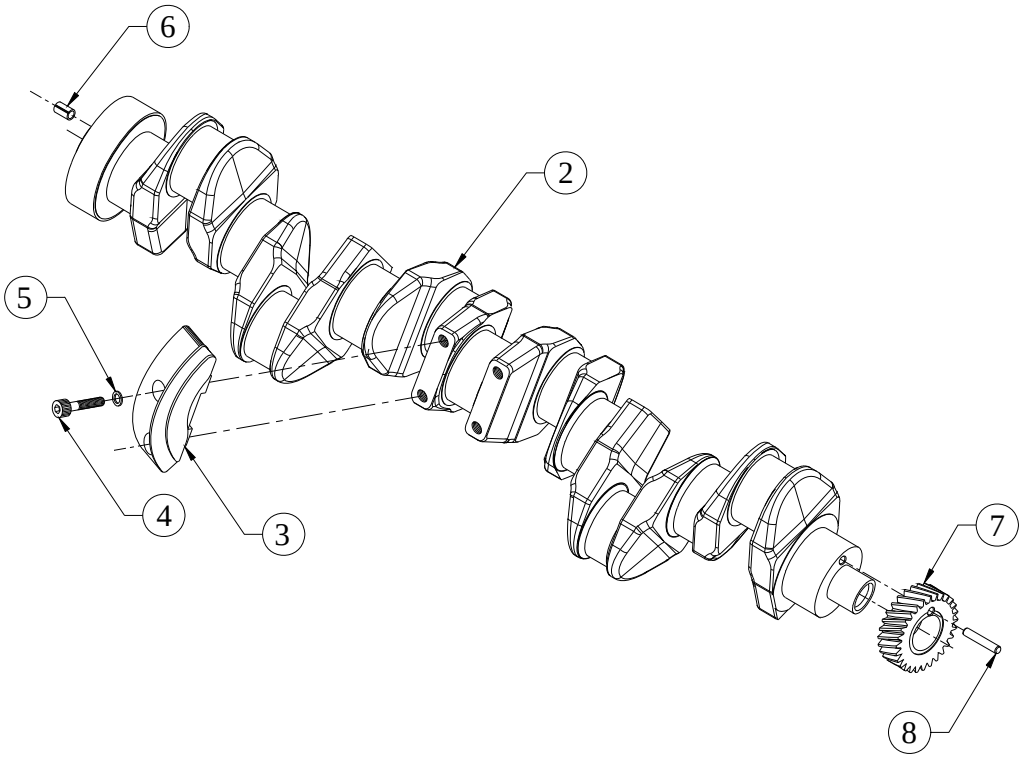

SR.NO.	PART NO.	DESCRIPTION	QTY.	REMARKS
*1	06.004.40.0.00	CR'SHAFT ASSLY. WITH CR'GEAR (UPGRADED)	1	CONSISTING OF SR. NO. 2 TO 8
2	06.004.01.0.00	CRANK SHAFT	1	NOT SUPPLIED LOOSE
3	04.005.11.0.00	BALANCE WT.	6	NOT SUPPLIED LOOSE
4	04.005.12.0.00	SOCKET HEAD BOLT - M12X1.75X60 -10.9	12	
5	02.005.04.0.00	WASHER	12	
6	50.540.11.018.	SPRING DOWEL	1	
7	03.005.02.0.00	CRANK-SHAFT GEAR	1	NOT SUPPLIED LOOSE
8	50.401.08.045.	DOWEL PIN 8X45	1	

TITLE: - CYL. HEAD TEMP. SWITCH	**GROUP: -** 04.093

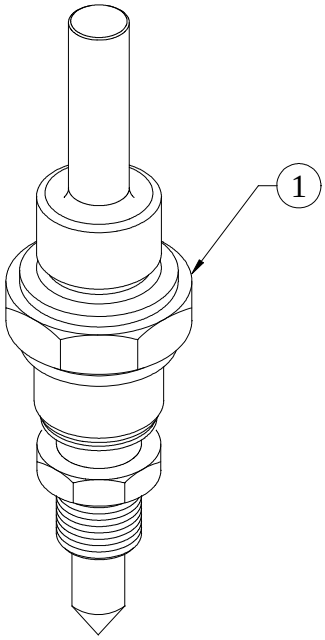

SR.NO.	PART NO.	DESCRIPTION	QTY.	REMARKS
1	06.087.02.0.00	TEMP SWITCH	1	

TITLE: -CYLINDER HEAD (FOR ENGINES SATISFYING EURO II NORMS AND CPCB STAGE 1)	**GROUP: -** 02.120

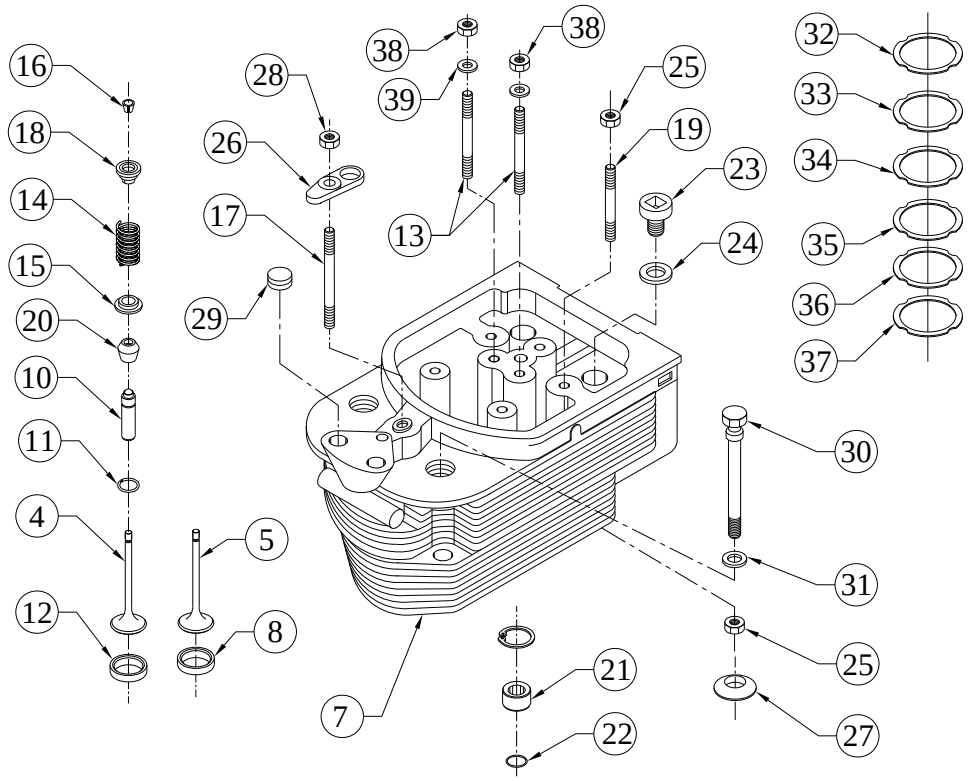

SR.NO.	PART NO.	DESCRIPTION	QTY.	REMARKS
*1	02.120.20.0.00	CYLINDER HEAD ASSEMBLY COMPLETE (FOR P TYPE NOZZLE)	1	CONSISTING OF SR NO.-2, 23 TO 29
*2	02.120.30.0.00	CYLINDER HEAD ASSEMBLY WITH VALVES (FOR P TYPE NOZZLE)	1	CONSISTING OF SR NO.- 4 TO 6 & 13 TO 22
*3	02.445.10.0.00	INLET & EXHAUST VALVE PAIR	2	CONSISTING OF SR NO.- 4 & 5
4	02.445.03.0.00	EXHAUST VALVE (US TIER 1 ENGINE)	1	
5	02.445.02.0.00	INLET VALVE (US TIER 1 ENGINE)	1	
*6	02.120.40.0.00	CYLINDER HEAD SUB ASSEMBLY WITH INSERTS & GUIDE (FOR P TYPE NOZZLE)	1	CONSISTING OF SR NO.- 7 TO 9 & 12
7	02.120.01.0.00	CYLINDER HEAD(S/F P TYPE INJECTOR)	1	NOT SUPPLIED LOOSE

TITLE: -CYLINDER HEAD (FOR ENGINES SATISFYING EURO II NORMS AND CPCB STAGE 1)	**GROUP: -** 02.120

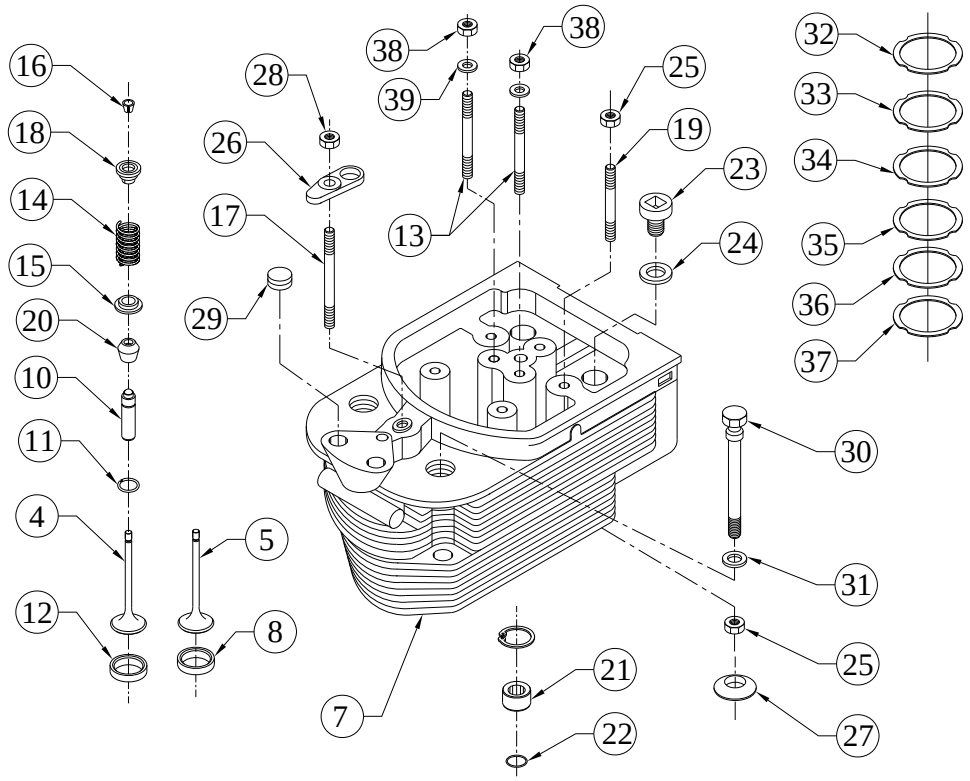

SR.NO.	PART NO.	DESCRIPTION	QTY.	REMARKS
8	02.445.04.0.00	INLET VALVE SEAT INSERT (US TIER 1 ENGINE)	1	
*9	06.631.40.0.00	VALVE GUIDE & WIRE SNAP RING ASSY.	2	CONSISTING OF SR NO.- 10 TO 11
10	06.631.01.9.00	VALVE GUIDE - SEMI FINSH (READY FOR F.BORE)	1	
11	02.022.18.0.00	WIRE SNAP RING	1	
12	04.684.02.0.00	VALAVE SEAT INSERT EXHAUST	1	
13	50.010.08.055.	STUD - M8X1.25X55 - 8.8	3	
14	02.022.13.0.00	VALVE SPRING	2	
15	02.022.21.0.00	SPRING CUP	2	
16	02.022.12.0.00	VALVE COLLET	4	
17	50.010.10.075.	STUD - M10X1.5X75 - 8.8	1	
18	02.022.11.0.00	VALVE CUP	2	
19	50.010.08.040.	STUD - M8X1.25X40 - 8.8	4	
20	06.631.02.0.00	VALVE SEAL	2	
21	02.120.04.0.00	SLEEVE FOR NOZZLE	1	
22	02.120.05.0.00	SEALING RING	1	

TITLE: -CYLINDER HEAD (FOR ENGINES SATISFYING EURO II NORMS AND CPCB STAGE 1)	**GROUP: -** 02.120

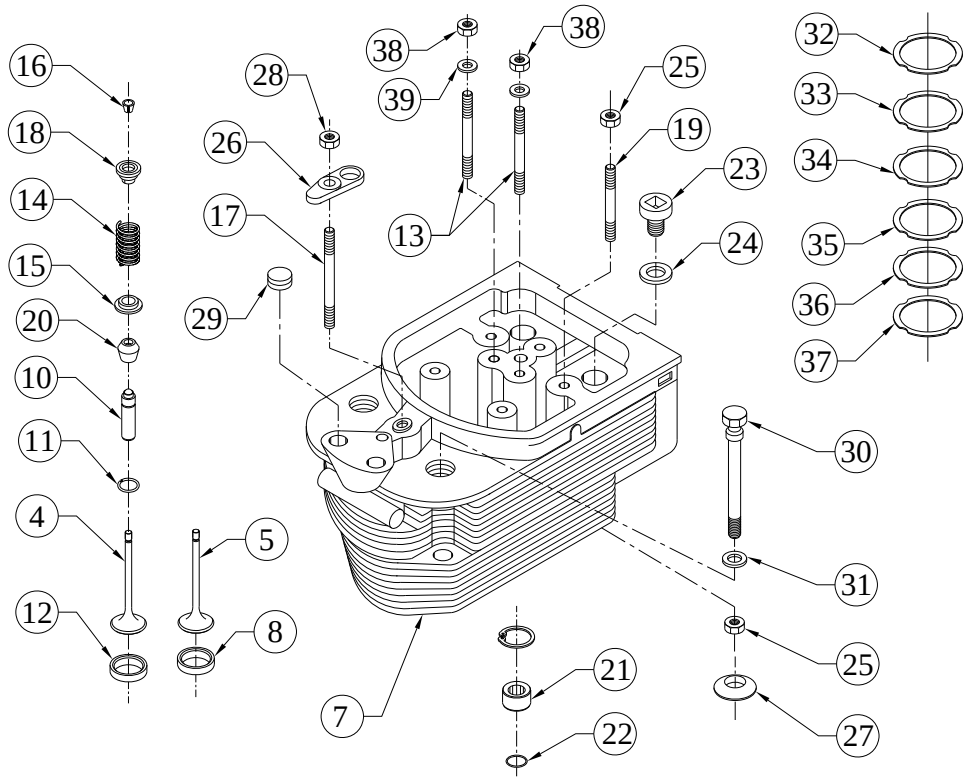

SR.NO.	PART NO.	DESCRIPTION	QTY.	REMARKS
23	02.022.09.0.00	LOCKING SCREW	2	
24	02.022.25.0.00	COPPER WASHER	2	
25	50.006.08.000.	NUT- M8X1.25 - GR.8	3	
26	08.030.04.0.00	FORK FOR INJECTOR	1	
27	F6.031.05.0.00	SPHERICAL WASHER(DIN 6319-C10.5)	1	
28	50.006.10.000.	NUT - M10X1.5 - GR.8	1	
29	02.494.01.0.00	BUTTON FOR INECTOR YOKE.	1	
30	02.022.03.0.00	CYLINDER HEAD BOLT 12X211	4	
31	02.022.04.0.00	WASHER	4	
32	04.291.11.0.00	INTERMEDIATE RING (1.5 MM THICK)	1	
33	04.291.15.0.00	INTERMEDIATE RING(1.7 MM THICK)	1	
34	06.292.01.0.00	INTERMEDIATE RING(1.1 MM THICK)	1	

TITLE: -CYLINDER HEAD (FOR ENGINES SATISFYING EURO II NORMS AND CPCB STAGE 1)	**GROUP: -** 02.120

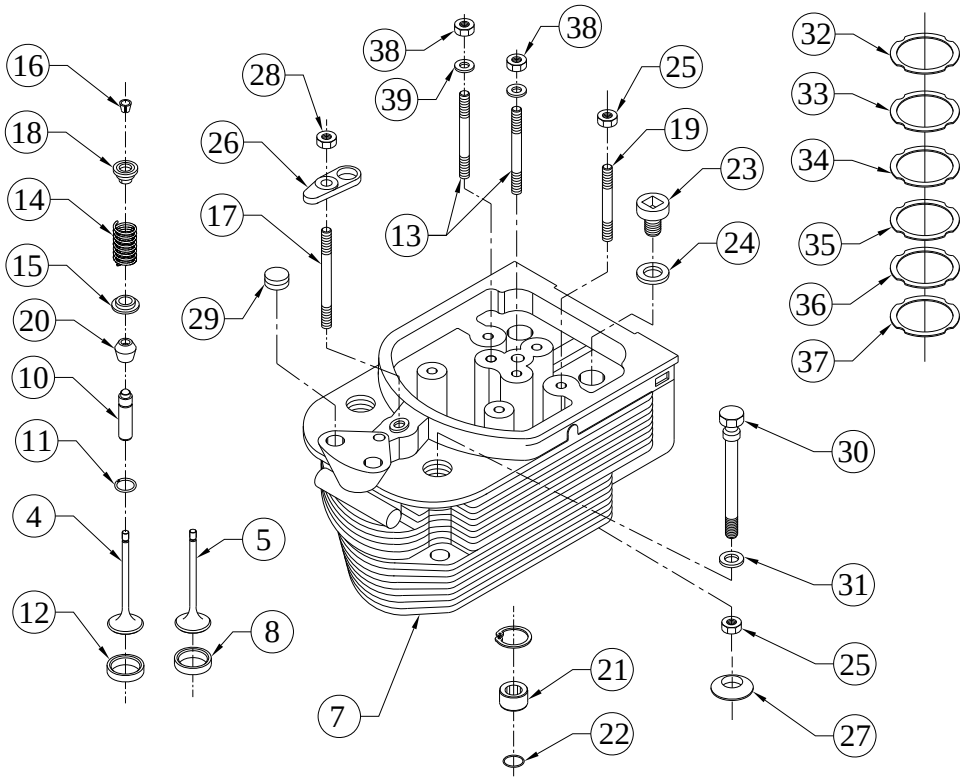

SR.NO.	PART NO.	DESCRIPTION	QTY.	REMARKS
35	04.291.22.0.00	INTERMEDIATE RING(2.0 MM THICK)	1	
36	04.291.06.0.00	INTERMEDIATE RING(1.3 MM THICK)	1	
37	04.291.03.0.00	INTERMEDIATE RING(1 MM THK.)	1	
38	50.006.08.000.	NUT- M8X1.25 - GR.8	2	
39	50.506.08.000.	PLAIN MACHINED WASHER - M8	2	

TITLE: - CYLINDER LINER (TURBOCHARGED)	**GROUP: -** 02.183

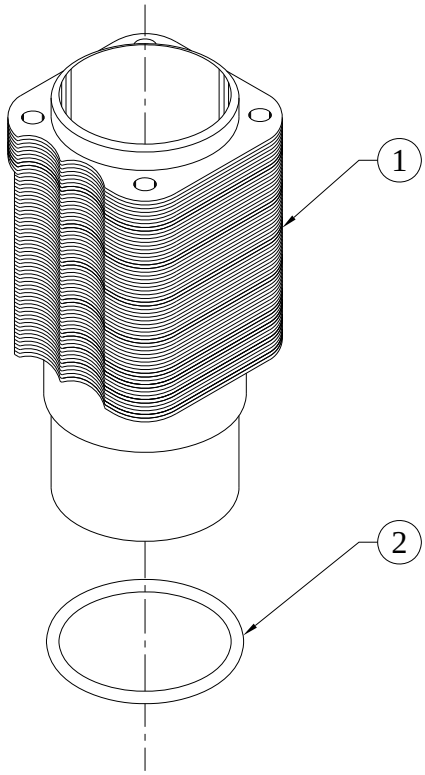

SR.NO.	PART NO.	DESCRIPTION	QTY.	REMARKS
1	02.183.01.0.00	CYLINDER LINER	1	
2	02.019.03.0.00	SHIM RING FOR CYL.LINER (0.2 THK.)	2	

TITLE: - DELIVERY TUBE	**GROUP: -** 03.012

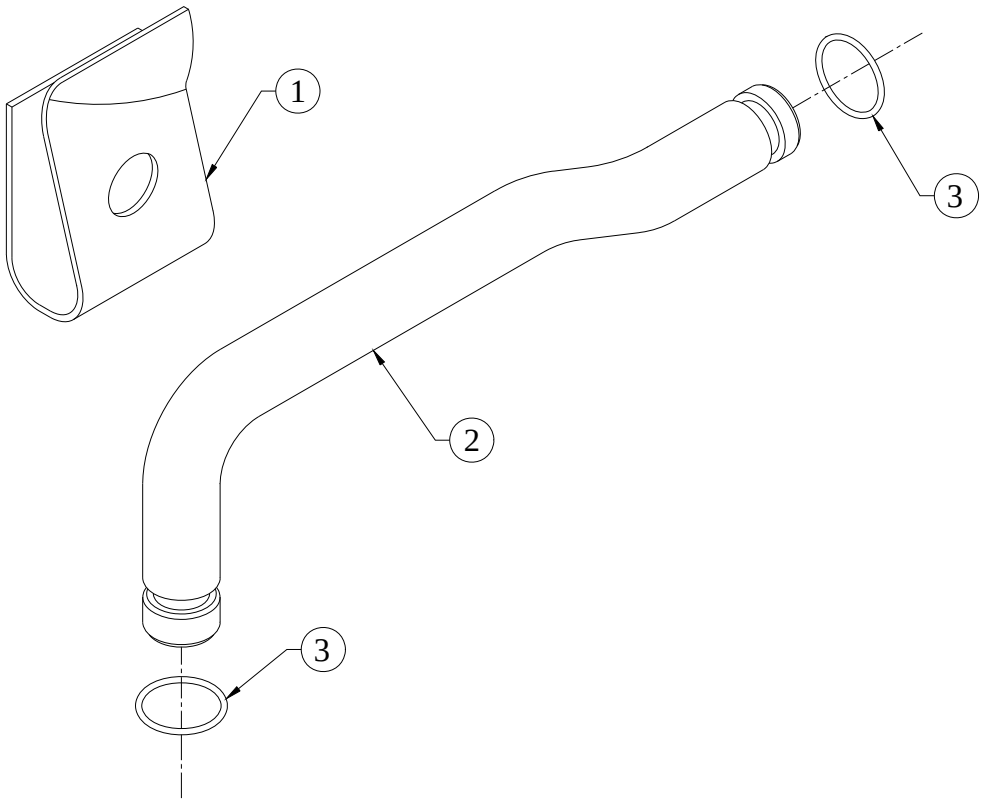

SR.NO.	PART NO.	DESCRIPTION	QTY.	REMARKS
1	03.012.04.0.00	YOKE SPRING (PIPE CLAMP)	1	
2	03.012.11.0.00	DELIVERY TUBE (S/F -L.H.D -SA)	1	
3	03.012.02.0.00	O-RING DELIVERY TUBE (3x14, 21508)	2	

TITLE: - DIP STICK (20DEG INCL SHORT)	**GROUP: -** 06.248

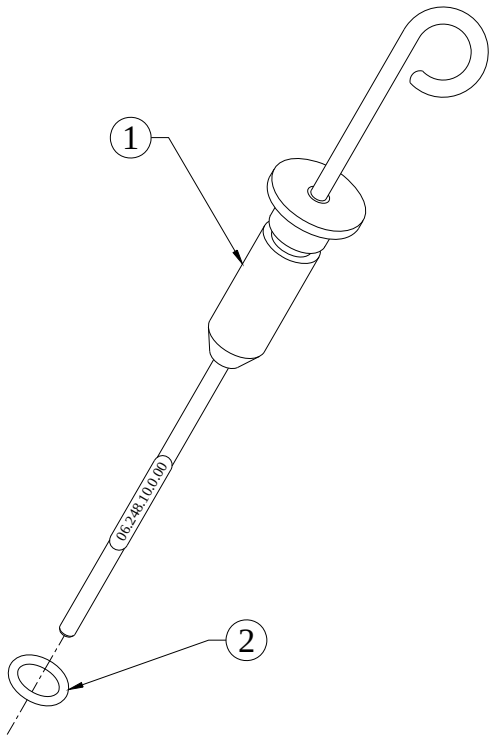

SR.NO.	PART NO.	DESCRIPTION	QTY.	REMARKS
1	06.248.10.0.00	DIPSTICK ASSLY	1	
2	03.036.01.0.00	O RING - DIPSTICK (2X5, 21515 OR 21511)	1	

TITLE: - END COVER FOR BELL HSG	**GROUP: -** 06.091

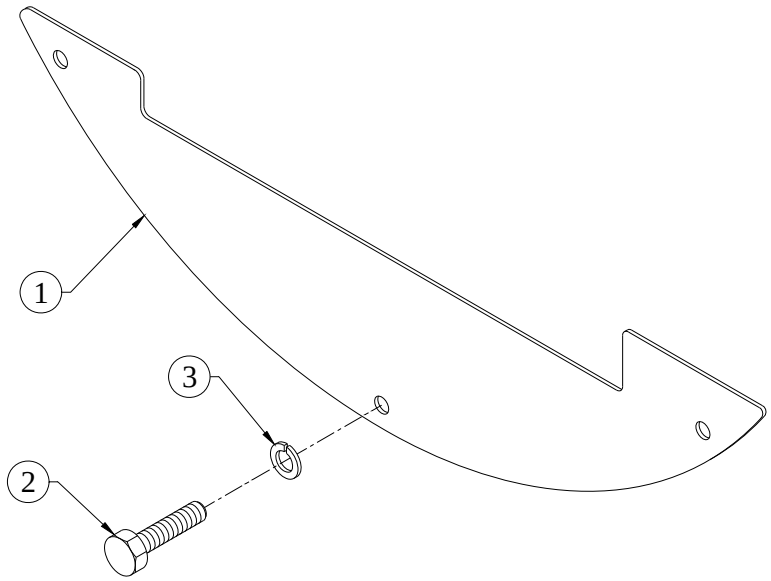

SR.NO.	PART NO.	DESCRIPTION	QTY.	REMARKS
1	06.091.01.0.00	END COVER FOR BELL HSG	1	
2	50.003.06.012.	SET SCREW - M6X1X12 - 8.8	3	
3	50.505.06.000.	SPRING WASHER - M6	3	

TITLE: -ENGINE WIRING HARNESS WITH DSE 6120 MKII GEMS SENSOR FOR HA6 & HA6TC OPEN GENSET	**GROUP: -** 06.1044.2

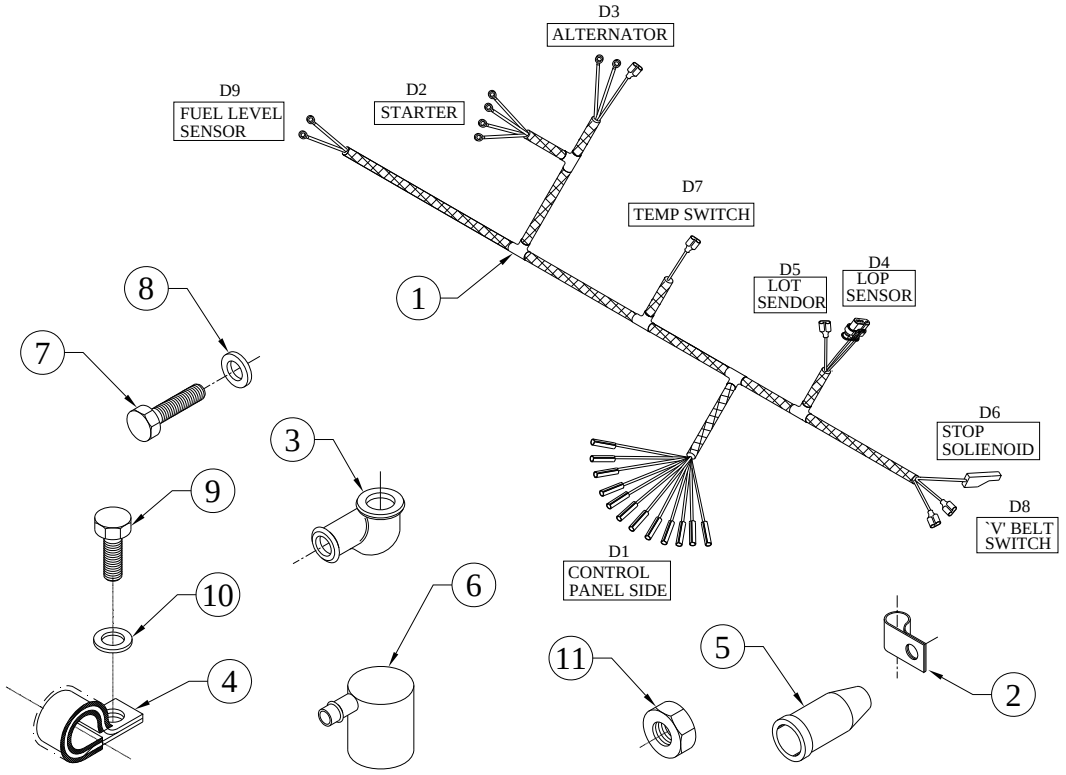

SR.NO.	PART NO.	DESCRIPTION	QTY.	REMARKS
1	06.1044.20.0.PR	ENGINE WIRING HARNESS FOR HA6 & HA6TC OPEN GENSET	1	
2	34.151.03.0.00	CLIP FOR FLEXIBLE PIPE WITH SLEEVE	7	
3	3H.905.01.0.00	RUBBER SLEEVE 16 DIA	3	
4	3H.905.02.0.00	CLIP 25 DIA FOR FLEXIBLE PIPE	1	
5	3H.905.05.0.00	RUBBER SLEEVE FOR TEMP.SWITCH / SENSOR	1	
6	46.252.02.0.00	RUBBER SLEEVE 38X10 FOR PR GAUGE SENDOR	1	
7	50.003.10.020.	SET SCREW - M10X1.5X20 - 8.8	2	
8	50.506.10.000.	PLAIN MACHINED WASHER - M10	2	
9	50.003.12.020.	SET SCREW - M12X1.75X20 - 8.8	1	
10	50.548.12.000.	SPL. PLAIN WASHER - M12	1	
11	50.006.08.000.	NUT- M8X1.25 - GR.8	1	

TITLE: -EXHAUST AIR BAFFLE	**GROUP: -** 06.024

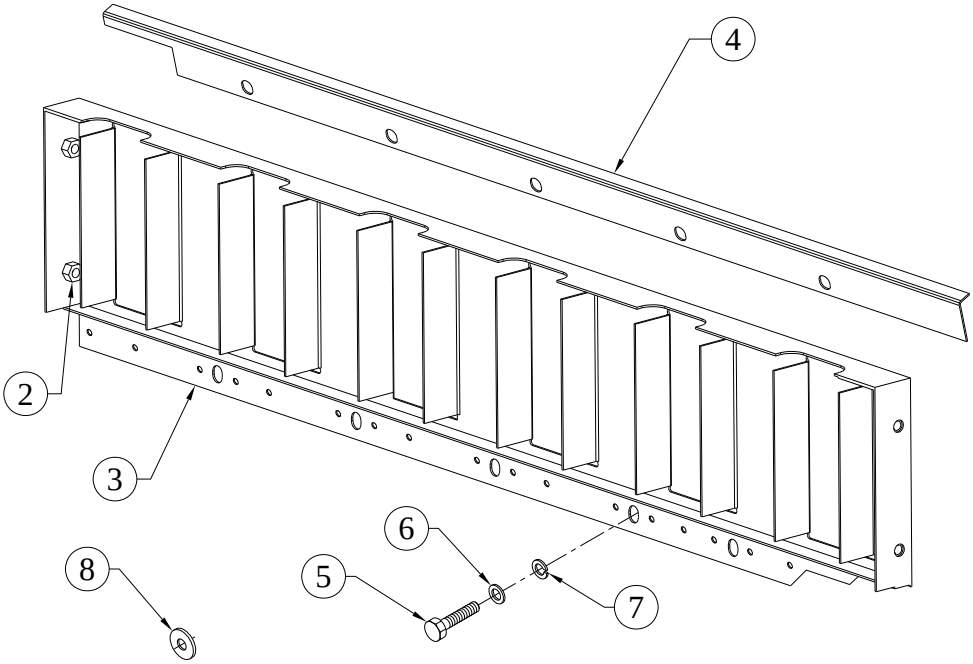

SR.NO.	PART NO.	DESCRIPTION	QTY.	REMARKS
*1	06.024.10.0.00	EXHAUST AIR BAFFLE ASSEMBLY	1	CONSISTING OF SR. NO. 2 TO 4
2	02.028.02.0.00	NUT	4	
3	06.024.01.0.00	EXHAUST AIR BAFFLE	1	
4	06.024.02.0.00	ANGLE FOR EXH.AIR BAFFLE	1	
5	50.003.08.020.	SET SCREW - M8X1.25X20 - 8.8	5	
6	50.506.08.000.	PLAIN MACHINED WASHER - M8	4	
7	50.505.08.000.	SPRING WASHER - M8	5	
8	03.060.08.0.00	WASHER	1	

TITLE: -EXHAUST DIFFUSER (K26 TURBO)	**GROUP: -** 04.579

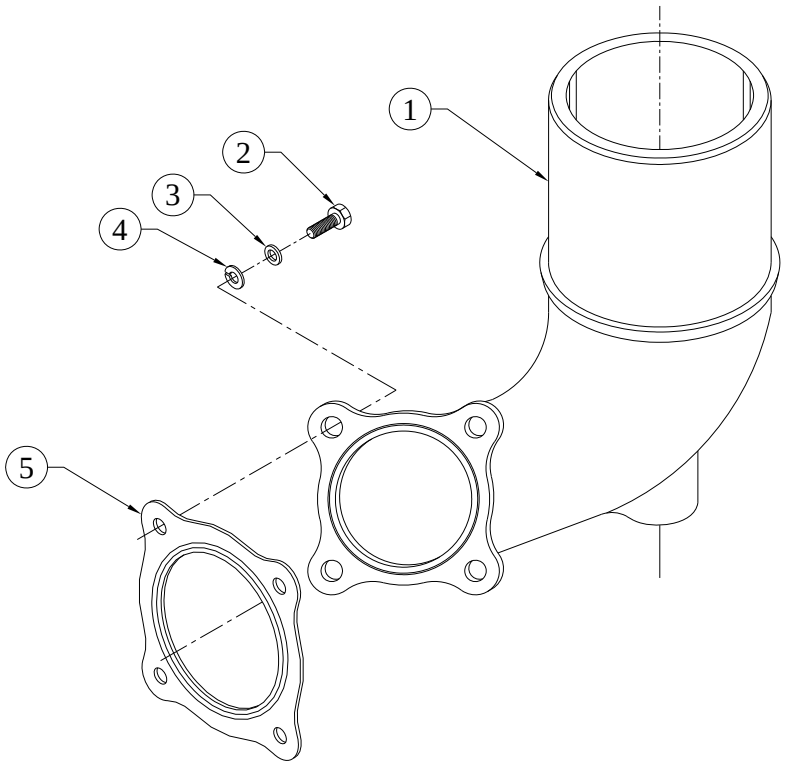

SR.NO.	PART NO.	DESCRIPTION	QTY.	REMARKS
1	04.579.01.0.00	EXHAUST DIFFUSER (K26 TURBO)	1	
2	50.011.08.025.	SOCKET HEAD SCREW - M8X1.25X25 - 8.8	4	
3	50.506.08.000.	PLAIN MACHINED WASHER - M8	4	
4	50.505.08.000.	SPRING WASHER - M8	4	
5	4H.130.07.0.00	JOINT S S FOR ADAPTOR RING	1	

TITLE: -EXHAUST MANIFOLD FOR K26 TURBOCHARGER	**GROUP: -** 06.764

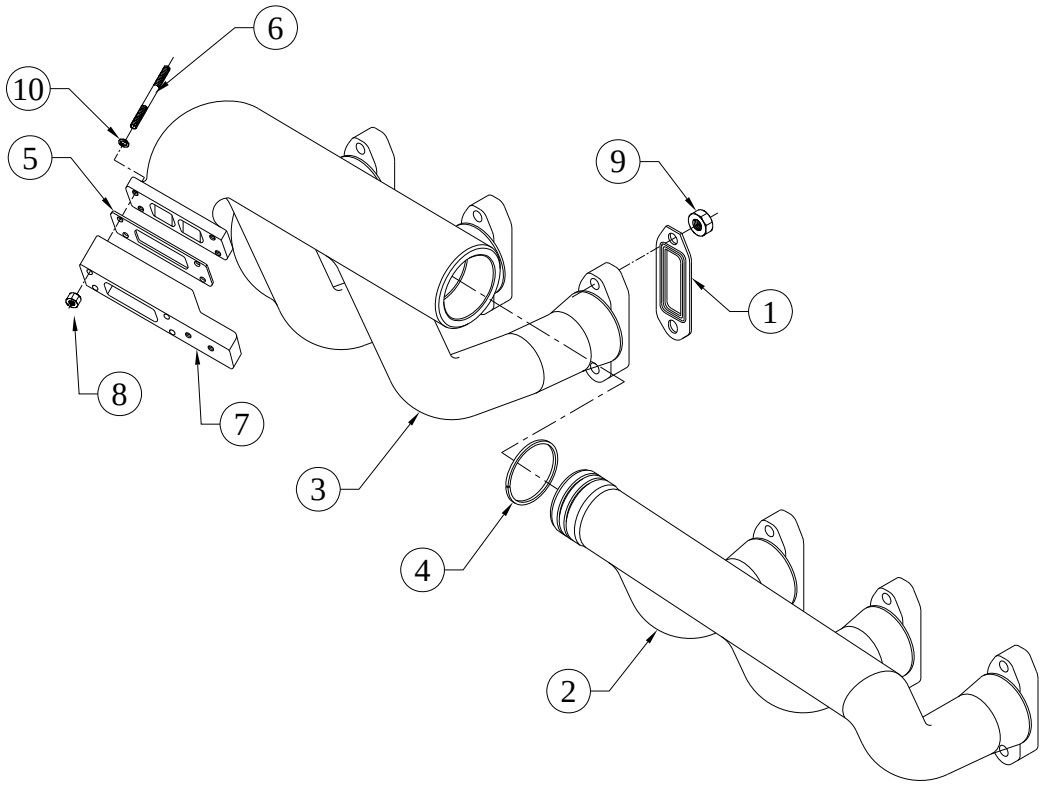

SR.NO.	PART NO.	DESCRIPTION	QTY.	REMARKS
1	02.045.08.0.00	JOINT (FOR EXH. INLET)	6	
2	06.219.01.0.00	ONE PIPE EXH MANIFOLD F.	1	
3	06.764.01.0.00	TWO PIPE EXHAUST MANIFOLD	1	
4	06.219.03.0.00	SEALING RING	2	
5	06.764.03.0.00	JOINT FOR TURBOCHARGER	2	
6	50.010.08.070.	STUD - M8X1.25X70 - 8.8	4	
7	06.764.02.0.00	ADAPTER FOR TURBOCHARGER MOUNTING	1	
8	50.080.08.000.	NUT (SS) - M8x1.25	4	
9	02.022.24.0.00	NUT M8 (BRASS)	12	
10	50.505.08.000.	SPRING WASHER - M8	4	

TITLE: - EXHAUST SILENCER (HEAT RESISTANCE BLACK PAINT)	**GROUP: -** 04.599

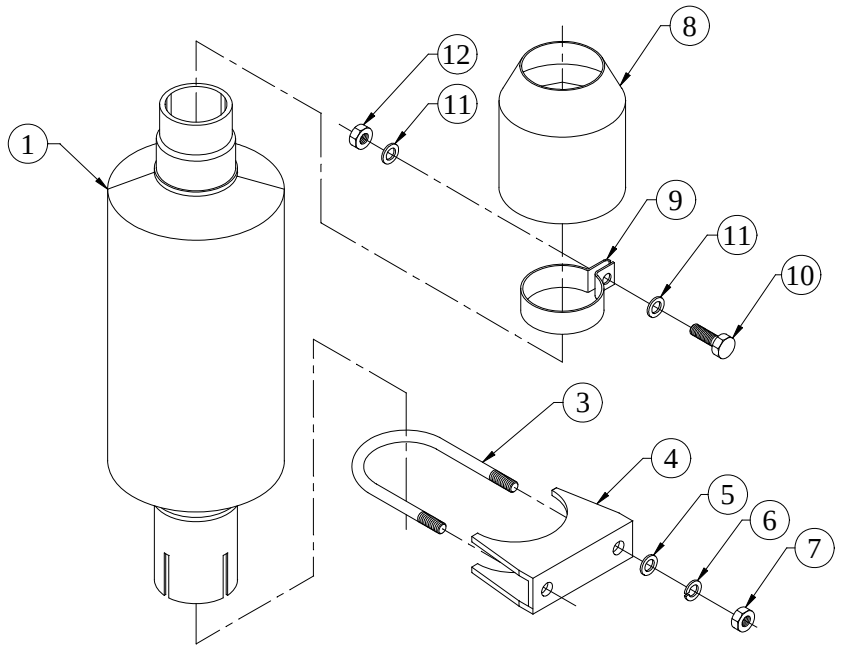

SR.NO.	PART NO.	DESCRIPTION	QTY.	REMARKS
1	04.599.01.0.00	EXHAUST SILENCER	1	
*2	06.089.20.0.00	ASSEMBLY OF U CLAMP (S/F SILENCER)	1	CONSISTING OF SR. NO. 3 TO 7
3	06.089.02.0.00	U CLAMP	1	NOT SUPPLIED LOOSE
4	06.089.03.0.00	CLAMPING PLATE	1	NOT SUPPLIED LOOSE
5	50.506.10.000.	PLAIN MACHINED WASHER - M10	2	
6	50.505.10.000.	SPRING WASHER - M10	2	
7	50.006.10.000.	NUT - M10X1.5 - GR.8.8	2	
8	04.599.02.0.00	RAIN CAP (BLACK PAINT) (REF - 06.309.02.0.00)	1	
9	06.309.04.0.00	CLAMP FOR EXHAUST PIPE	1	
10	50.003.10.030.	SET SCREW - M10X1.5X30 - 8.8	1	
11	50.506.10.000.	PLAIN MACHINED WASHER - M10	2	
12	50.006.10.000.	NUT - M10X1.5 - GR.8.8	1	

TITLE: - EXPANSION BELLOW (3") AND MOUNTING	**GROUP: -** 06.602

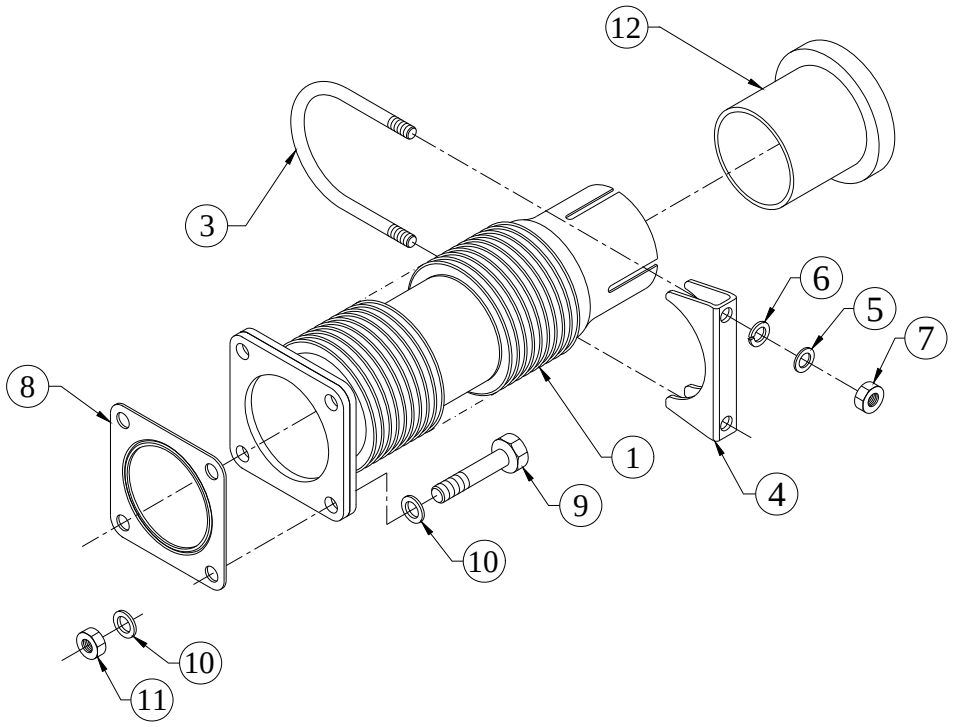

SR.NO.	PART NO.	DESCRIPTION	QTY.	REMARKS
1	06.602.10.0.00	EXPANSION BELLOW ASSLY 3"	1	
*2	06.089.20.0.00	ASSEMBLY OF U CLAMP (S/F SILENCER)	1	CONSISTING OF SR.NO. 3 TO 7.
3	06.089.02.0.00	U CLAMP	1	NOT SUPPLIED LOOSE
4	06.089.03.0.00	CLAMPING PLATE	1	NOT SUPPLIED LOOSE
5	50.506.10.000.	PLAIN MACHINED WASHER - M10	2	
6	50.505.10.000.	SPRING WASHER - M10	2	
7	50.006.10.000.	NUT - M10X1.5 - GR.8.8	2	
8	06.468.03.0.00	JOINT FOR EXH DIFFUSER DOWN OPEN (OUTLET) STAINLESS STEEL	1	
9	50.002.10.055.	SET BOLT - M10X1.5X55 - 8.8	4	
10	50.506.10.000.	PLAIN MACHINED WASHER - M10	8	
11	50.080.10.000.	STAINLESS STEEL NUT M10-AISI-304	4	
12	06.628.02.0.00	SLEEVE FOR EXHAUST SILENCER (76 DIA)	1	

TITLE: -FLYWHEEL END FOOT(PACKING)	**GROUP: -** 03.072

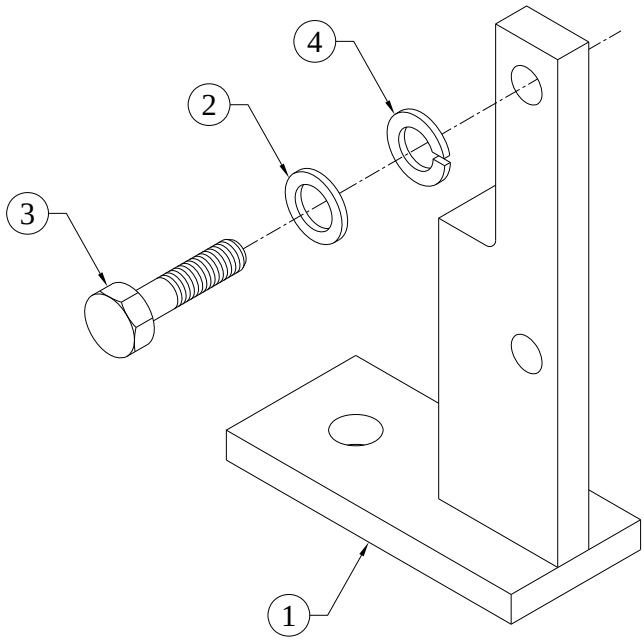

SR.NO.	PART NO.	DESCRIPTION	QTY.	REMARKS
1	03.072.01.0.00	FLYWHEEL END FOOT(FIL.SIDE)	2	
2	50.506.12.000.	PLAIN MACHINED WASHER - M12	8	
3	50.002.12.030.	SET BOLT - M12X1.75X30 - 8.8	4	
4	50.505.12.000.	SPRING WASHER - M12	4	

TITLE: -FLYWHEEL HOUSING SAE-3 (PG APPLICATION)	**GROUP: -** 03.974

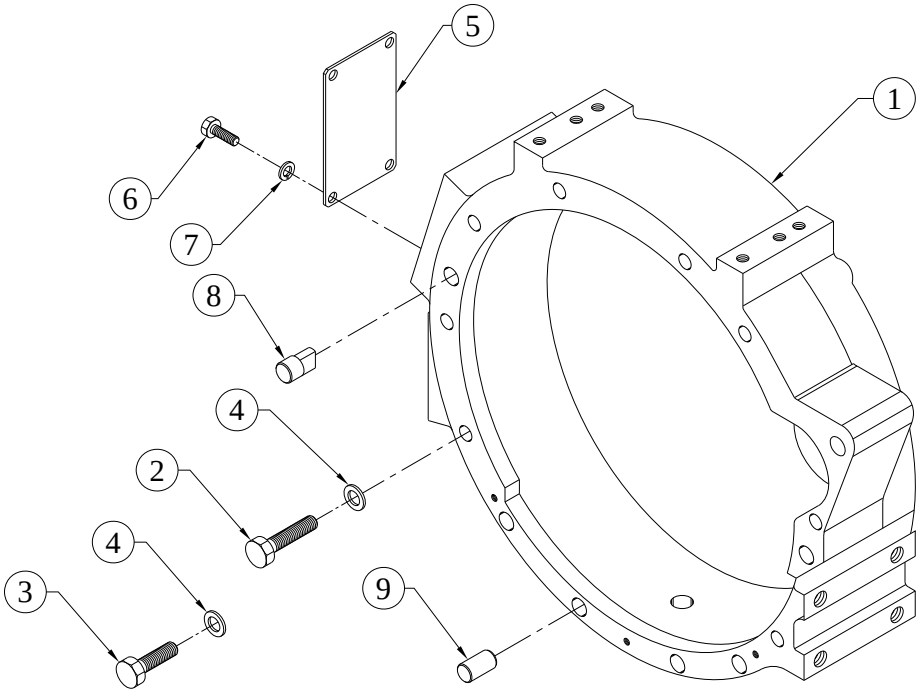

SR.NO.	PART NO.	DESCRIPTION	QTY.	REMARKS
1	03.974.01.0.00	FLYWHEEL HOUSING SAE-3 FOR PG APPLICATION	1	
2	50.003.10.035.	SET SCREW - M10X1.5X35 - 8.8	8	
3	50.003.10.025.	SET SCREW - M10X1.5X25 - 8.8	1	
4	65.061.15.0.00	HARD WASHER	9	
5	03.086.02.0.00	COVER FOR FLY WHEEL HSG	1	
6	50.003.08.016.	SET SCREW - M8X1.25X16 - 8.8	4	
7	50.505.08.000.	SPRING WASHER - M8	4	
8	02.052.04.0.00	CYLINDRICAL DOWEL BETWEEN CR.CASE AND F.W.HSG.	1	
9	02.052.05.0.00	DOWEL WITH FLATS BETWEEN CR.CASE AND F.W.HSG	1	

TITLE: -FLYWHEEL(C-110 PTO & SP-111 PTO)	**GROUP: -** 04.039

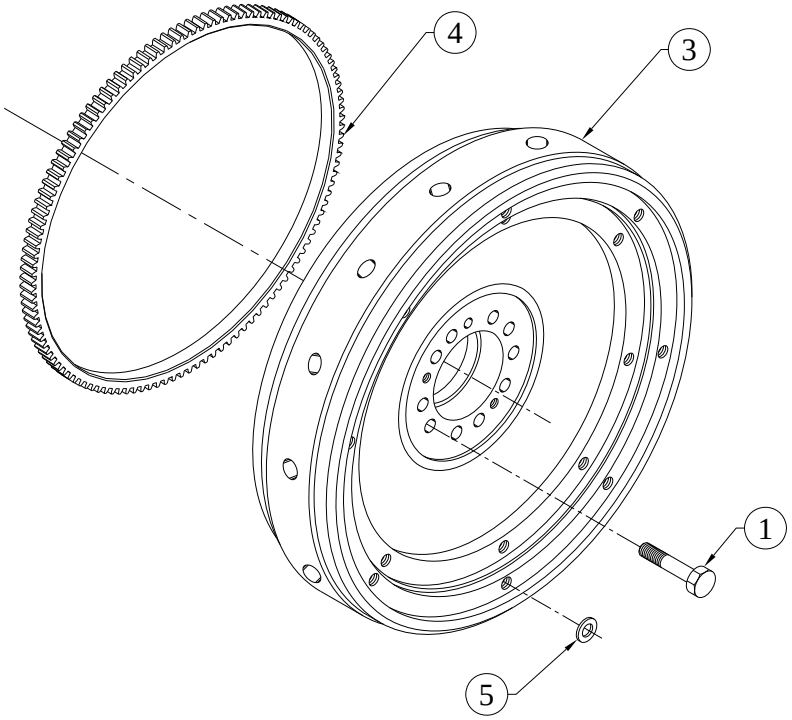

SR.NO.	PART NO.	DESCRIPTION	QTY.	REMARKS
1	03.050.02.0.00	FLYWHEEL BOLT (M10X50)	10	
*2	04.039.10.0.00	FLYWHEEL ASSLY	1	CONSISTING OF SR.NO. 3,4
3	04.039.01.0.00	FLYWHEEL (C-110 PTO & SP-111 PTO)	1	
4	03.035.02.0.00	STARTER RING 121 TEETH, 3.175 MODULE	1	
5	50.505.10.000.	SPRING WASHER - M10	8	

TITLE: -FRONT COVER (STAGE 1)	**GROUP: -** 06.013.4

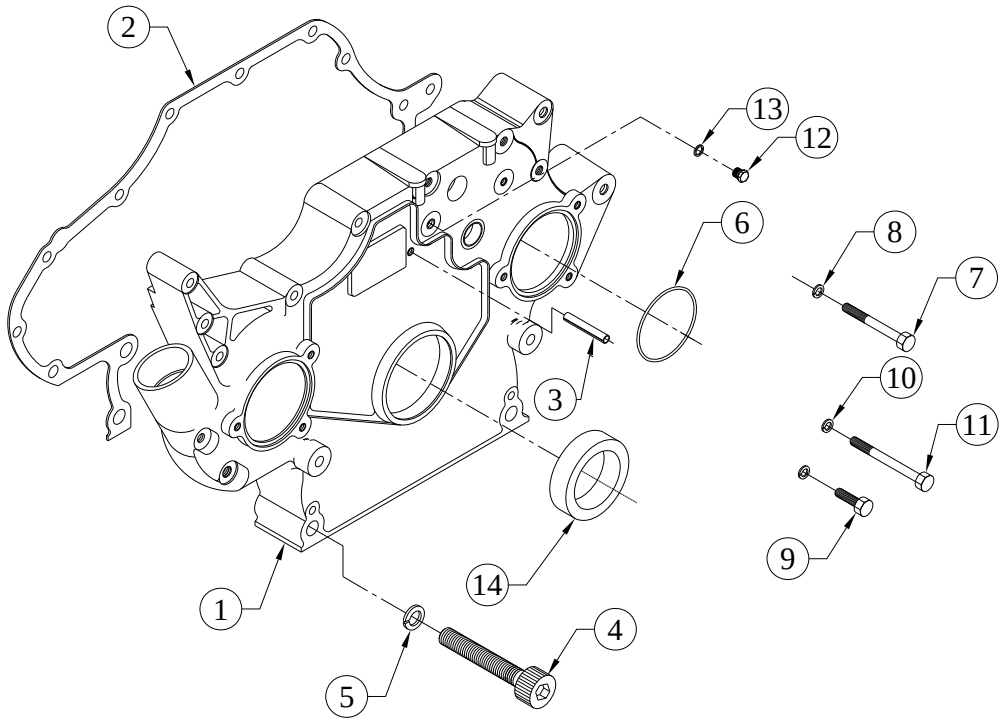

SR.NO.	PART NO.	DESCRIPTION	QTY.	REMARKS
1	06.482.01.0.00	FRONT COVER (EXPORT ENGINE)	1	
2	03.013.12.0.00	JOINT FOR FRONT COVER(ASBESTOSS FREE)	1	
3	50.540.10.045.	SPRING DOWEL (6 X 45)	1	
4	50.011.14.100.	SOCKET HEAD SCREW - M14X2X100 - 8.8	4	
5	50.505.14.000.	SPRING WASHER - M14	4	
6	03.013.11.0.00	O RING (3.2 X 78 SILICON)	1	
7	50.002.10.080.	SET BOLT - M10X1.5X80 - 8.8	1	
8	50.505.10.000.	SPRING WASHER - M10	1	
9	06.013.03.0.00	SET SCREW FOR COVER PLATE	1	
10	50.505.08.000.	SPRING WASHER - M8	2	
11	50.002.08.070.	SET BOLT - M8X1.25X70 - 8.8	2	
12	02.520.04.0.00	PRECOATED PLUG	1	
13	50.508.17.000.	COPPER WASHER (18X24)	1	
14	03.013.06.0.00	OIL SEAL (65X85X13)(CR MAKE)	1	

TITLE: -FRONT COVER (STAGE 2)	**GROUP: -** 06.013.2

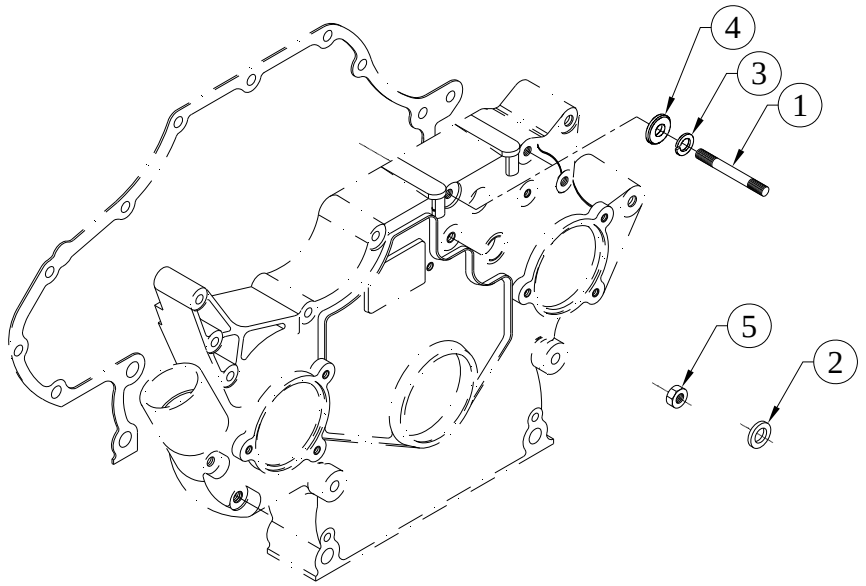

SR.NO.	PART NO.	DESCRIPTION	QTY.	REMARKS
1	50.010.08.080.	STUD - M8X1.25X80 - 8.8	2	
2	50.508.08.000.	COPPER WASHER (10X16)	2	
3	50.505.08.000.	SPRING WASHER - M8	2	
4	50.548.08.000.	SPL.PLAIN M/CED WASHER	2	
5	50.006.06.000.	NUT - M6X1 - GR.8	2	

TITLE: - FRONT COWLING (WITH FULL RING)	**GROUP: -** 06.021

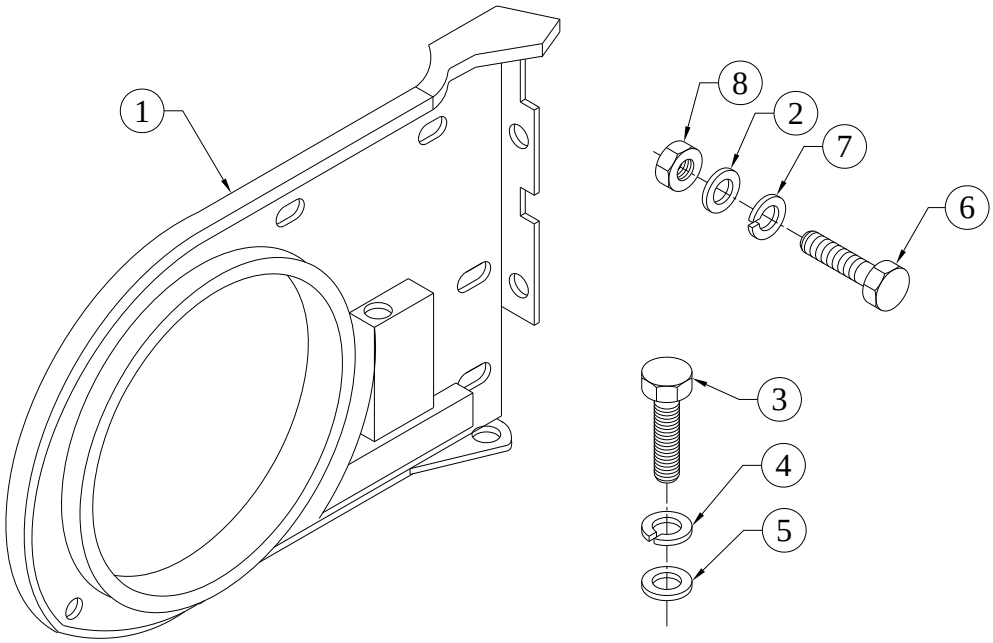

SR.NO.	PART NO.	DESCRIPTION	QTY.	REMARKS
1	06.021.01.0.00	FRONT COWLING (KHD NO 0213 6439)	1	
2	03.023.02.0.00	SPL. PLAIN WASHER - M6	3	
3	50.003.08.016.	SET SCREW - M8X1.25X16 - 8.8	1	
4	50.505.08.000.	SPRING WASHER - M8	1	
5	50.506.08.000.	PLAIN MACHINED WASHER - M8	2	
6	50.003.06.014.	SET SCREW - M6X1X14 - 8.8	4	
7	50.505.06.000.	SPRING WASHER - M6	4	
8	50.006.06.000.	NUT - M6X1 - GR.8	1	

TITLE: -FUEL CONNECTION	**GROUP: -** 06.610

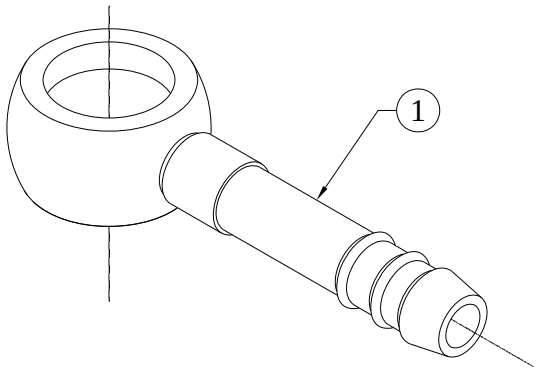

SR.NO.	PART NO.	DESCRIPTION	QTY.	REMARKS
1	06.610.10.0.00	HOSE TAIL CONNECTION (S/F M14 BANJO)	1	

TITLE: - FUEL FILTER & PIPING (SPINON)	**GROUP: -** 06.474

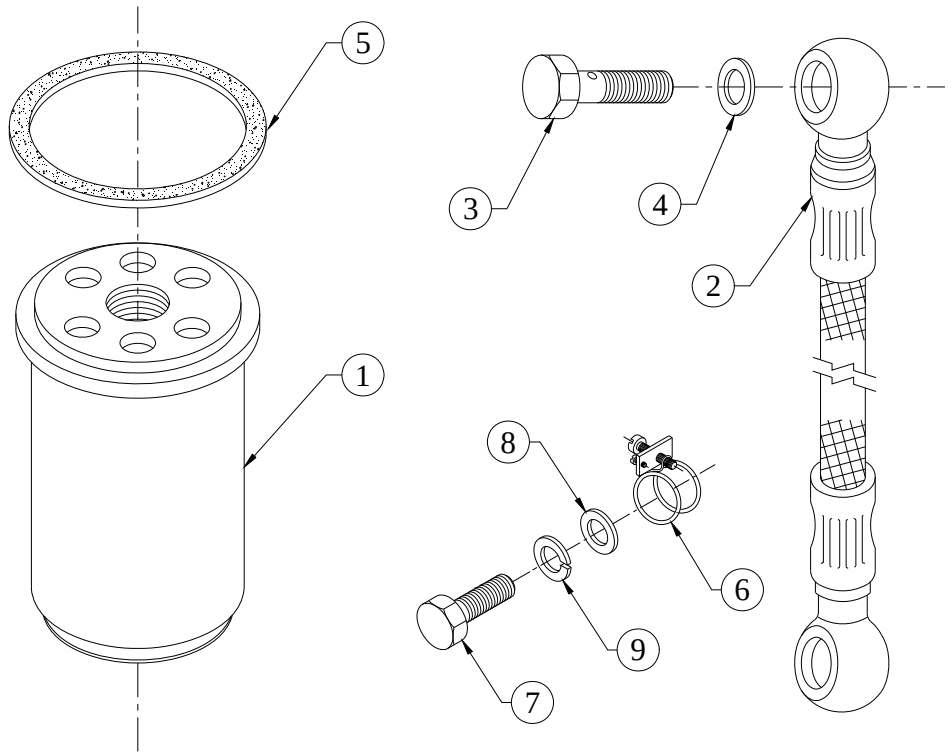

SR.NO.	PART NO.	DESCRIPTION	QTY.	REMARKS
1	04.296.01.0.00	FUEL FILTER CARTRIDGE	1	
2	4H.896.09.0.00	FUEL PIPE M14 X M14 B, PARALLEL,900 L , 9.0 I.D.,SAE 100 R6	2	
3	50.504.04.000	BANJO BOLT – M14x1.5	2	
4	50.508.12.000.	COPPER WASHER (14X20)	4	
5	04.296.02.0.00	SEALING RING FOR FILTER	1	
6	42.109.10.0.00	ASSEMBLY OF CLAMP	2	
7	50.003.08.016	SET SCREW – M8x1.25x16	2	
8	50.506.08.000	PLAIN MACHINED WASHER – M8	2	
9	50.505.08.000	SPRING WASHER – M8	2	

TITLE: - FUEL INJECTION PUMP (STAGE 2)	**GROUP: -** 06.441.2

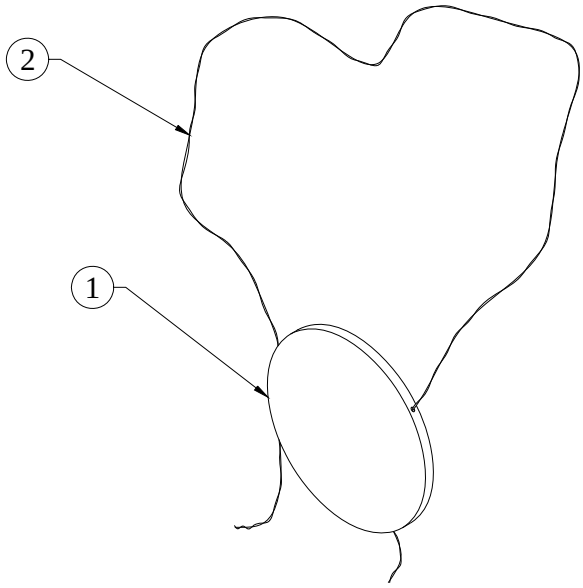

SR.NO.	PART NO.	DESCRIPTION	QTY.	REMARKS
1	10.027.02.0.00	LEAD SEAL (5945010300)	1	NOT SUPPLIED LOOSE
2	10.027.03.0.00	SEALING WIRE (5945010600)	1	NOT SUPPLIED LOOSE

TITLE: -FUEL PUMP 4% GOVERNING (CPCB) S/F VERTICAL STOP SOLENOID	**GROUP: -** 06.815.2

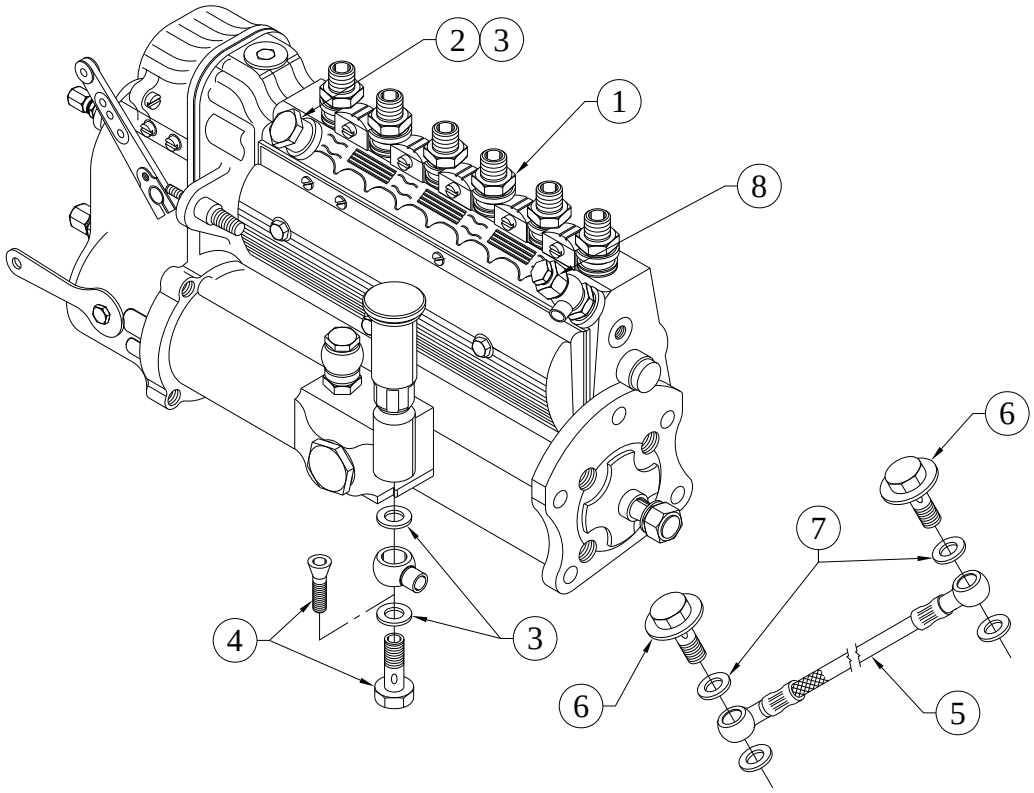

SR.NO.	PART NO.	DESCRIPTION	QTY.	REMARKS
1	06.815.10.0.00	FUEL PUMP (MICO PART NO. F 002 AOZ 396)	1	
2	50.504.04.000.	BANJO BOLT - M14X1.5	2	
3	50.508.12.000.	COPPER WASHER (14X20)	6	
4	34.016.15.0.00	BANJO BOLT WITH STRAINER (2 443 456 900)	1	
5	04.304.02.0.00	LUB OIL SUPPLY HOSE	1	
6	03.660.07.0.00	SPECIAL BANJO BOLT(L.O.SUPPLY TO PUMP)	2	
7	50.508.08.000.	COPPER WASHER (10X16)	4	
8	34.032.60.0.00	O F VALVE ASSLY	1	

TITLE: -FUEL PUMP GEAR(SR 2000 PUMP)	**GROUP: -** 04.266

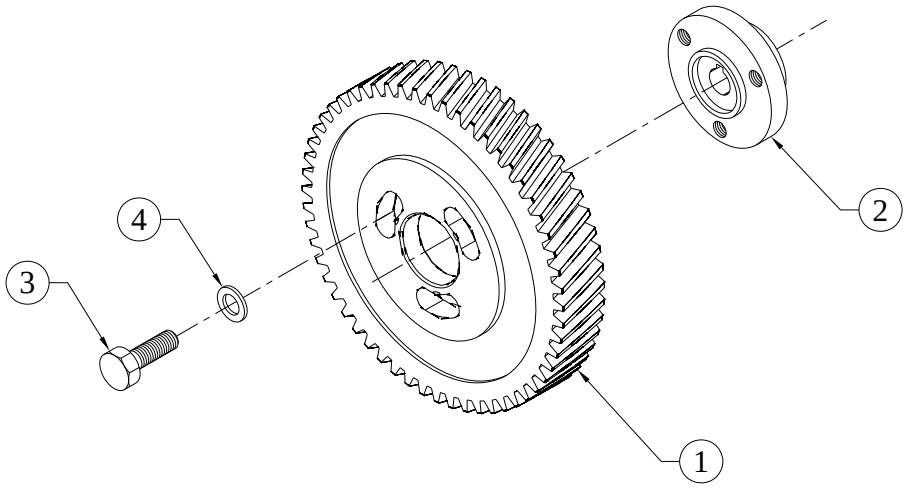

SR.NO.	PART NO.	DESCRIPTION	QTY.	REMARKS
1	03.716.02.0.00	FUEL PUMP GEAR	1	
2	04.266.01.0.00	HUB FOR FUEL PUMP GEAR (SR 2000 PUMP)	1	
3	50.003.08.025.	SET SCREW - M8X1.25X25 - 8.8	3	
4	03.716.03.0.00	WASHER (FUEL PUMP GEAR)	3	

TITLE: - GEAR END FOOT (CLOSED COUPLED GENSET)	**GROUP: -** 02.434

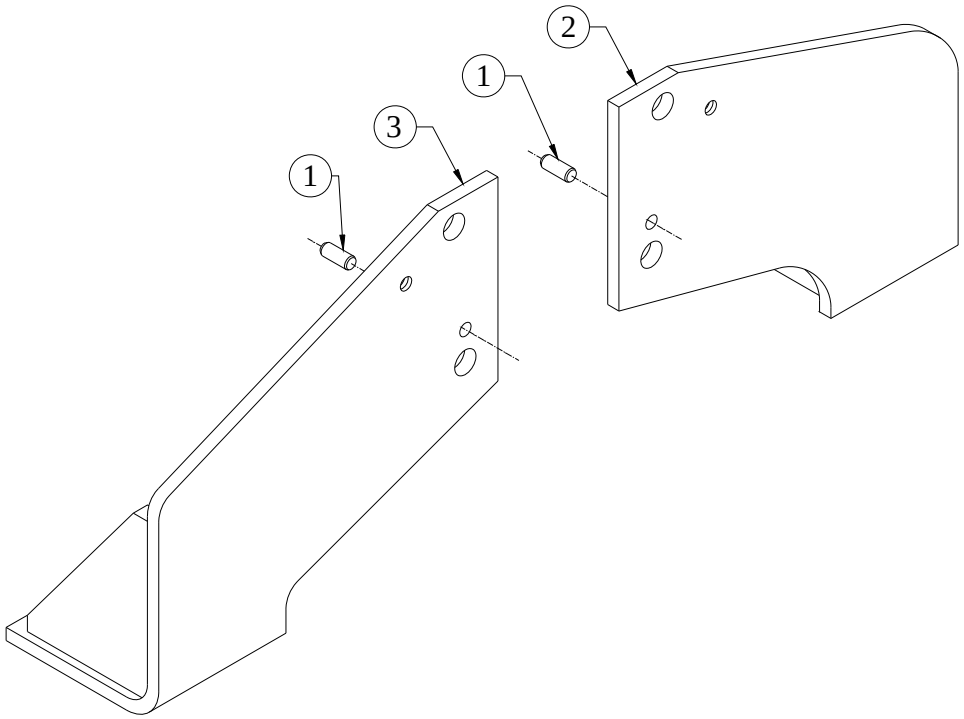

SR.NO.	PART NO.	DESCRIPTION	QTY.	REMARKS
1	50.401.08.020.	DOWEL PIN 8X20	2	
2	02.532.01.0.00	ENGINE MOUNTING FOOT G.E. (STARTER SIDE)	1	
3	02.532.02.0.00	ENGINE MOUNTING FOOT G.E. (F.P. SIDE)	1	

TITLE: -HOT AIR DUCTING (UPWARD OPENING) KKK TURBO	**GROUP: -** 06.811

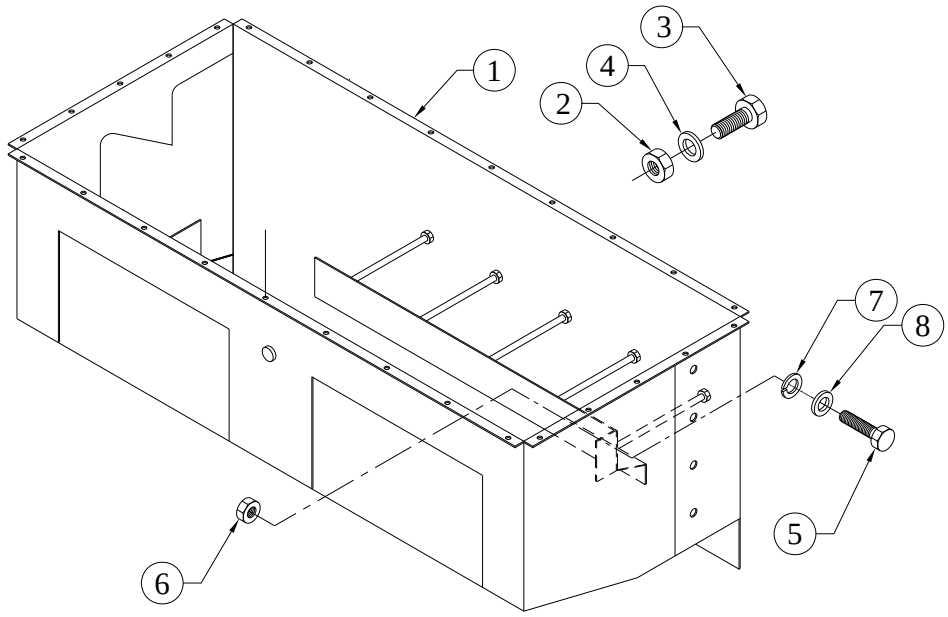

SR.NO.	PART NO.	DESCRIPTION	QTY.	REMARKS
1	06.811.10.0.00	HOT AIR DUCTING UPWARD OPENING (KKK TURBOCHARGER)	1	
2	06.225.03.0.00	NUT (SPECIAL)	5	
3	50.003.08.020.	SET SCREW - M8X1.25X20 - 8.8	5	
4	50.506.08.000.	PLAIN MACHINED WASHER - M8	4	
5	50.003.06.014.	SET SCREW - M6X1X14 - 8.8	9	
6	50.006.06.000.	NUT - M6X1 - GR.8	4	
7	50.505.06.000.	SPRING WASHER - M6	9	
8	03.023.02.0.00	SPL. PLAIN WASHER - M6	5	

TITLE: -INJECTION PIPES	**GROUP: -** 06.026

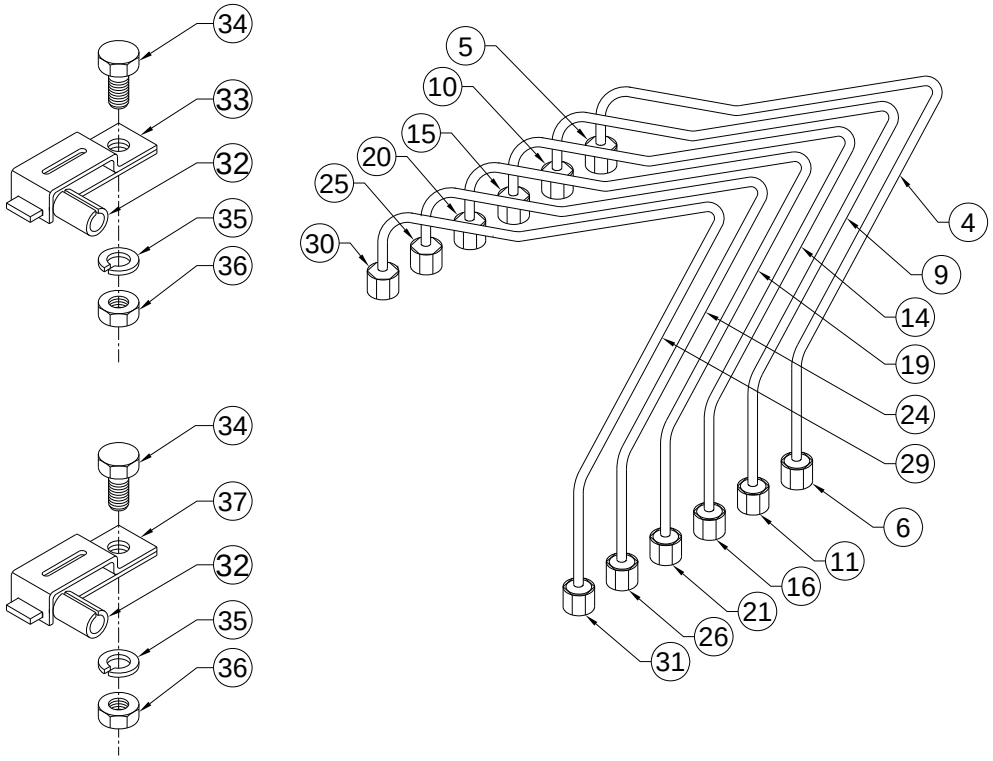

SR.NO.	PART NO.	DESCRIPTION	QTY.	REMARKS
*1	06.473.90.0.00	SET OF HIGH PRESSURE PIPES DHA694	1	CONSISTING OF SR.NO. 2,7,12,17,22,27,32 TO 37
*2	06.473.10.0.00	HIGH PRESSURE PIPE ASSLY.DHA694 (CYL.NO.1 FROM FWE)	1	CONSISTING OF SR.NO. 3
*3	06.473.10.9.00	H.P.PIPE ASSLY. (6 X 1.8 X 780 L)DHA694	1	CONSISTING OF SR.NO. 4 TO 6
4	06.473.01.0.00	HIGH PRESSURE PIPE(6 X 1.8 X 785L)HA694	1	NOT SUPPLIED LOOSE
5	03.723.02.0.00	UNION NUT (M12X1.5)	1	NOT SUPPLIED LOOSE
6	03.723.03.0.00	UNION NUT (M14X1.5)	1	NOT SUPPLIED LOOSE
*7	06.473.20.0.00	HIGH PRESSURE PIPE ASSLY.DHA694 (CYL.NO 2 FROM FWE)	1	CONSISTING OF SR.NO. 8

TITLE: -INJECTION PIPES	**GROUP: -** 06.026

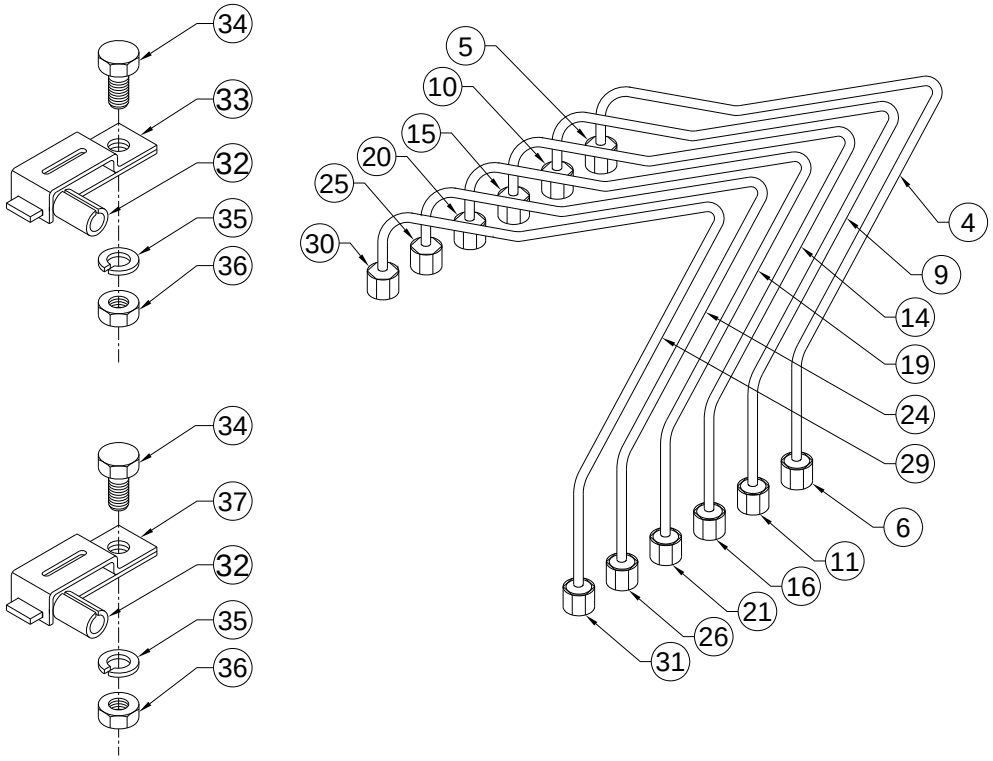

SR.NO.	PART NO.	DESCRIPTION	QTY.	REMARKS
*8	06.473.10.9.00	H.P.PIPE ASSLY. (6 X 1.8 X 780 L)DHA694	1	CONSISTING OF SR.NO. 9 TO 11
9	06.473.01.0.00	HIGH PRESSURE PIPE (6 X 1.8 X 785L)HA694	1	NOT SUPPLIED LOOSE
10	03.723.02.0.00	UNION NUT (M12X1.5)	1	NOT SUPPLIED LOOSE
11	03.723.03.0.00	UNION NUT (M14X1.5)	1	NOT SUPPLIED LOOSE
*12	06.473.30.0.00	HIGH PRESSURE PIPE ASSLY.DHA694 (CYL. NO 3 FROM FWE)	1	CONSISTING OF SR.NO. 13
*13	06.473.10.9.00	H.P.PIPE ASSLY. (6 X 1.8 X 780 L)DHA694	1	CONSISTING OF SR.NO. 14 TO 16
14	06.473.01.0.00	HIGH PRESSURE PIPE (6 X 1.8 X 785L)HA694	1	NOT SUPPLIED LOOSE
15	03.723.02.0.00	UNION NUT (M12X1.5)	1	NOT SUPPLIED LOOSE
16	03.723.03.0.00	UNION NUT (M14X1.5)	1	NOT SUPPLIED LOOSE

TITLE: -INJECTION PIPES	**GROUP: -** 06.026

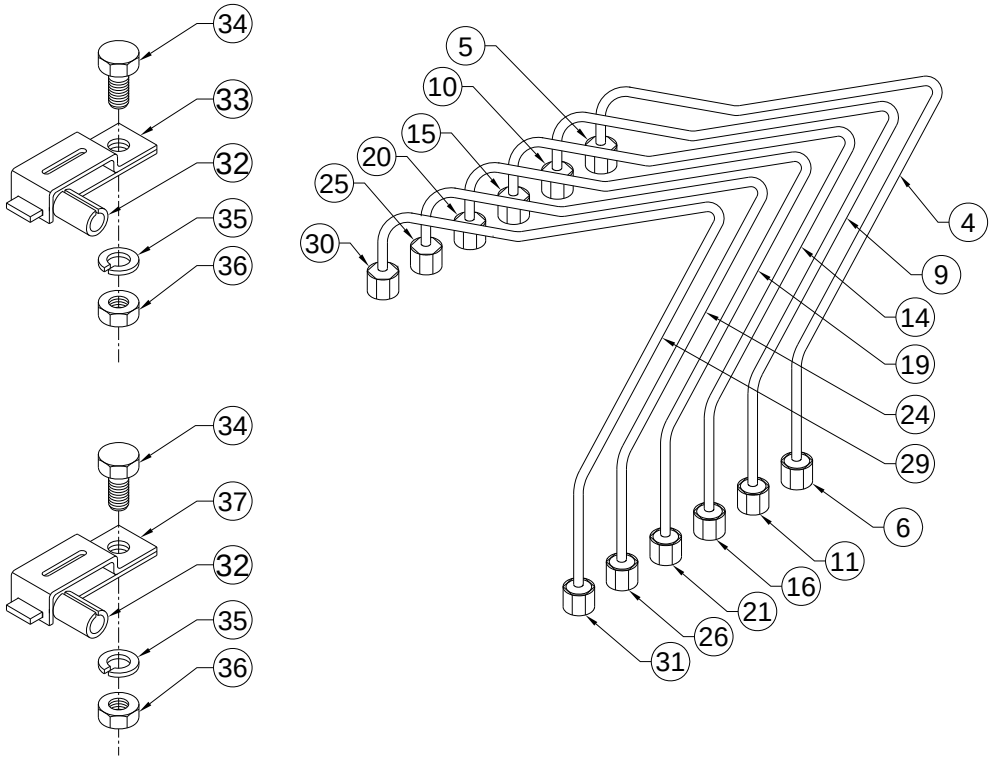

SR.NO.	PART NO.	DESCRIPTION	QTY.	REMARKS
*17	06.473.40.0.00	HIGH PRESSURE PIPE ASSLY.DHA694 (CYL.NO.4 FROM FWE)	1	CONSISTING OF SR.NO. 18
*18	06.473.10.9.00	H.P.PIPE ASSLY. (6 X 1.8 X 780 L)DHA694	1	CONSISTING OF SR.NO. 19 TO 21
19	06.473.01.0.00	HIGH PRESSURE PIPE (6 X 1.8 X 785L)HA694	1	NOT SUPPLIED LOOSE
20	03.723.02.0.00	UNION NUT (M12X1.5)	1	NOT SUPPLIED LOOSE
21	03.723.03.0.00	UNION NUT (M14X1.5)	1	NOT SUPPLIED LOOSE
*22	06.473.50.0.00	HIGH PRESSURE PIPE ASSLY.DHA694 (CYL.NO.5 FROM FWE)	1	CONSISTING OF SR.NO. 23
*23	06.473.10.9.00	H.P.PIPE ASSLY. (6 X 1.8 X 780 L)DHA694	1	CONSISTING OF SR.NO. 24 TO 26
24	06.473.01.0.00	HIGH PRESSURE PIPE(6 X 1.8 X 785L)HA694	1	NOT SUPPLIED LOOSE

TITLE: -INJECTION PIPES	**GROUP: -** 06.026

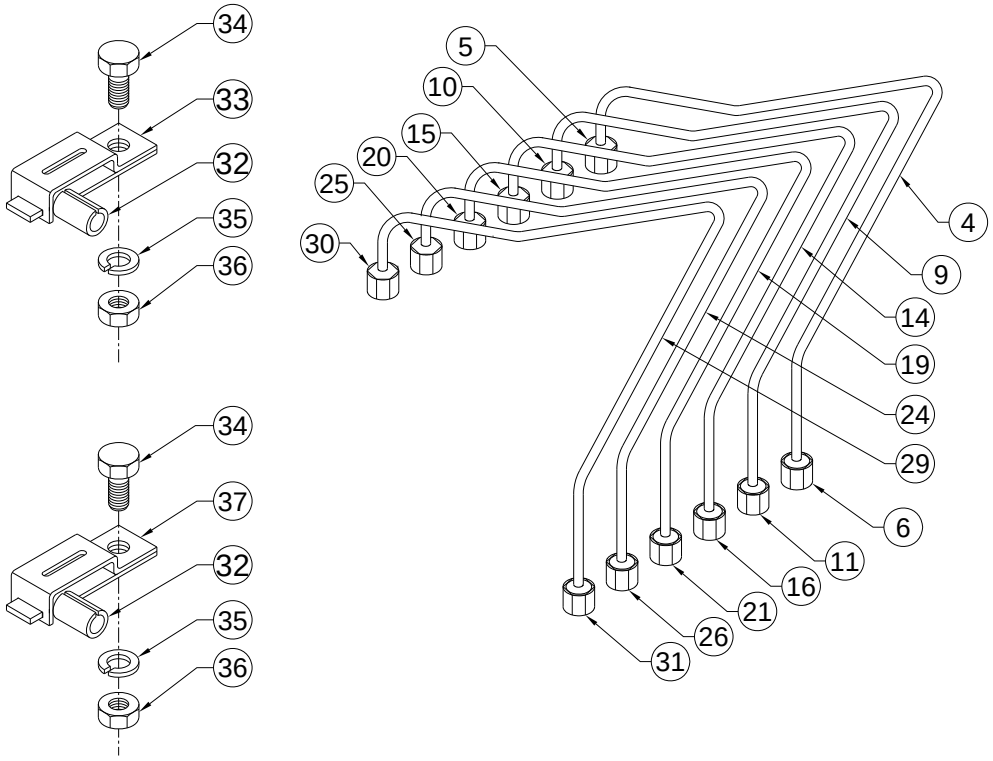

SR.NO.	PART NO.	DESCRIPTION	QTY.	REMARKS
25	03.723.02.0.00	UNION NUT (M12X1.5)	1	NOT SUPPLIED LOOSE
26	03.723.03.0.00	UNION NUT (M14X1.5)	1	NOT SUPPLIED LOOSE
*27	06.473.60.0.00	HIGH PRESSURE PIPE ASSLY.DHA694 (CYL.NO.6 FROM FWE)	1	CONSISTING OF SR.NO. 28
*28	06.473.10.9.00	H.P.PIPE ASSLY. (6 X 1.8 X 780 L)DHA694	1	CONSISTING OF SR.NO. 29 TO 31
29	06.473.01.0.00	HIGH PRESSURE PIPE (6 X 1.8 X 785L)HA694	1	NOT SUPPLIED LOOSE
30	03.723.02.0.00	UNION NUT (M12X1.5)	1	NOT SUPPLIED LOOSE
31	03.723.03.0.00	UNION NUT (M14X1.5)	1	NOT SUPPLIED LOOSE
32	02.036.03.0.00	RUBBER SLEEVE	15	
33	50.541.02.000.	PIPE CLIP. (FOR 3 PIPES)	1	
34	50.003.06.014.	SET SCREW - M6X1X14 - 8.8	4	
35	50.505.06.000.	SPRING WASHER - M6	4	

TITLE: -INJECTION PIPES	**GROUP: -** 06.026

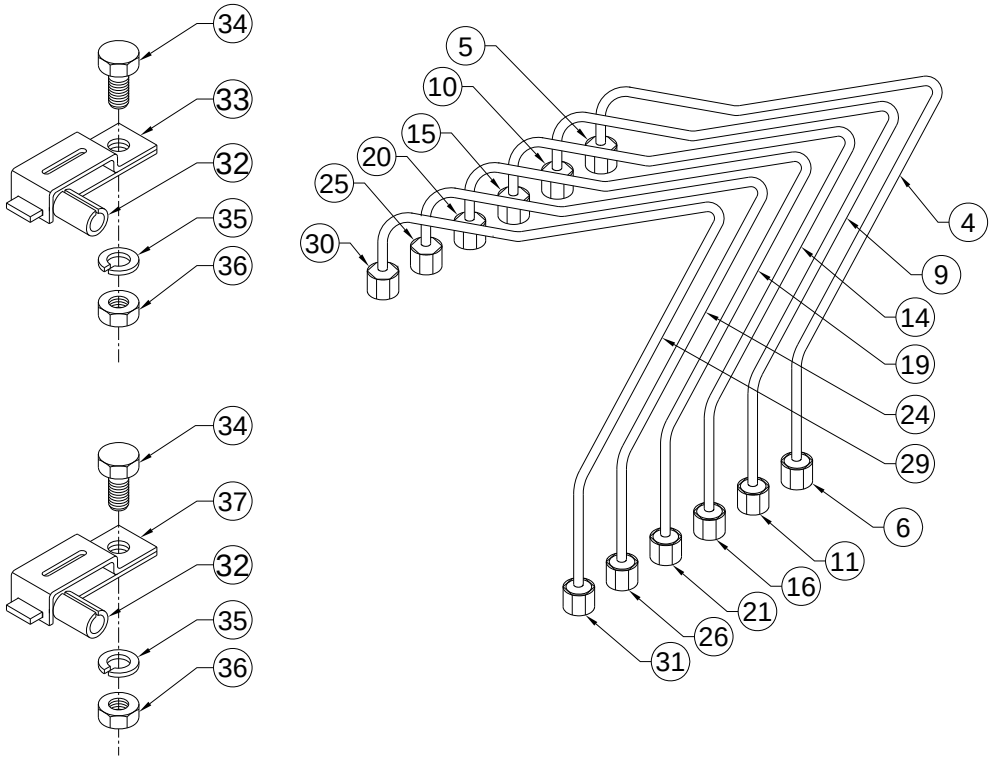

SR.NO.	PART NO.	DESCRIPTION	QTY.	REMARKS
36	50.006.06.000.	NUT - M6X1 - GR.8	4	
37	50.541.03.000.	PIPE CLIP (FOR 4 PIPES)	3	

TITLE: - INJECTOR AND NOZZLE	**GROUP: -** 04.596

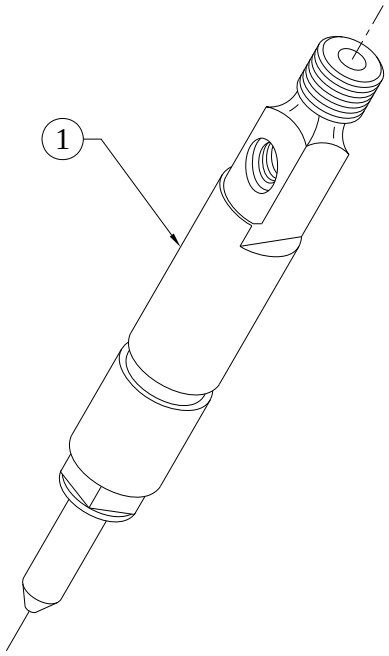

SR.NO.	PART NO.	DESCRIPTION	QTY.	REMARKS
1	04.596.03.0.00	INJECTOR FOR HA SERIES WITH NOZZLE B 433 387 812 (MICO PART NO E 080 0931 00)	1	

TITLE: -INLET CAP (FOR OIL BATH AIR CLEANER)	**GROUP: -** 06.483.01

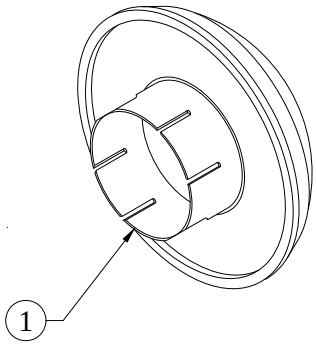

SR.NO.	PART NO.	DESCRIPTION	QTY.	REMARKS
1	06.483.01.0.00	INLET CAP (FOR OIL BATH AIR CLEANER)	1	

TITLE: - INLET MANIFOLD (STAGE 1)	**GROUP: -** 06.763.1

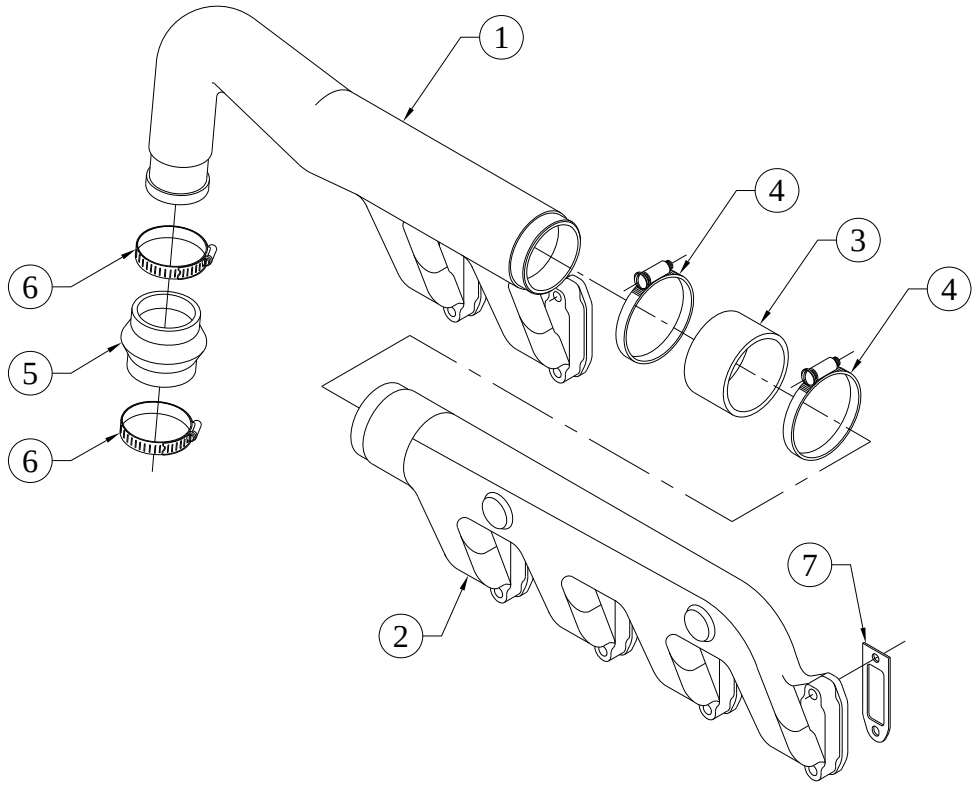

SR.NO.	PART NO.	DESCRIPTION	QTY.	REMARKS
1	06.763.01.0.00	INLET MANIFOLD FOR TURBO	1	
2	04.016.01.0.00	HA4 INLET MANIFOLD (ALU) (F)	1	
3	06.037.01.0.00	HOSE FOR INLET MANIFOLD	1	
4	50.519.14.000.	WORM DRIVE HOSE CLIP (89 MM)	2	
5	4H.168.11.0.00	RUBBER HOSE (FOR 'TR55' TURBO, COMPRESSOR OUTLET)	1	
6	50.519.11.000.	WORM DRIVE HOSE CLIP (61 MM)	2	
7	02.058.07.0.00	JOINT FOR AIR INLET MANIFOLD (ASBESTOSS FREE)	6	

TITLE: -INSTRUCTION STICKERS HA (SR 2000 F.P.)	**GROUP: -** 06.528

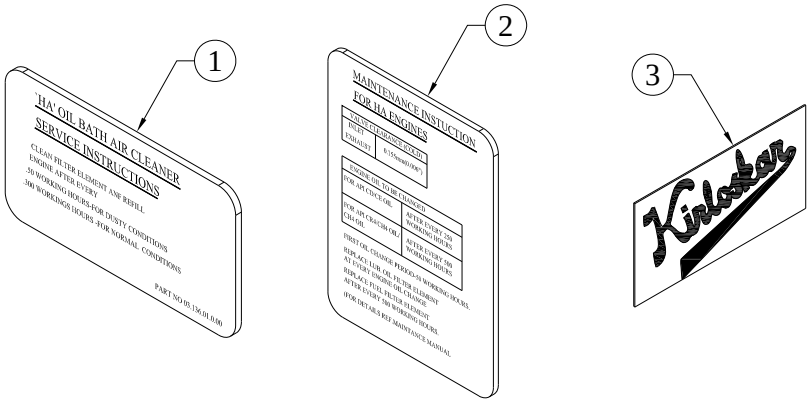

SR.NO.	PART NO.	DESCRIPTION	QTY.	REMARKS
1	03.136.01.0.00	DECAL INSTRUCTION PLATE	1	
2	03.136.03.0.00	DECAL INSTRUCTION STICKER.	1	
3	03.136.04.0.00	DECAL KIRLOSKAR MONOGRAM	1	

TITLE: - INTERMEDIATE GEAR	**GROUP: -** 03.008

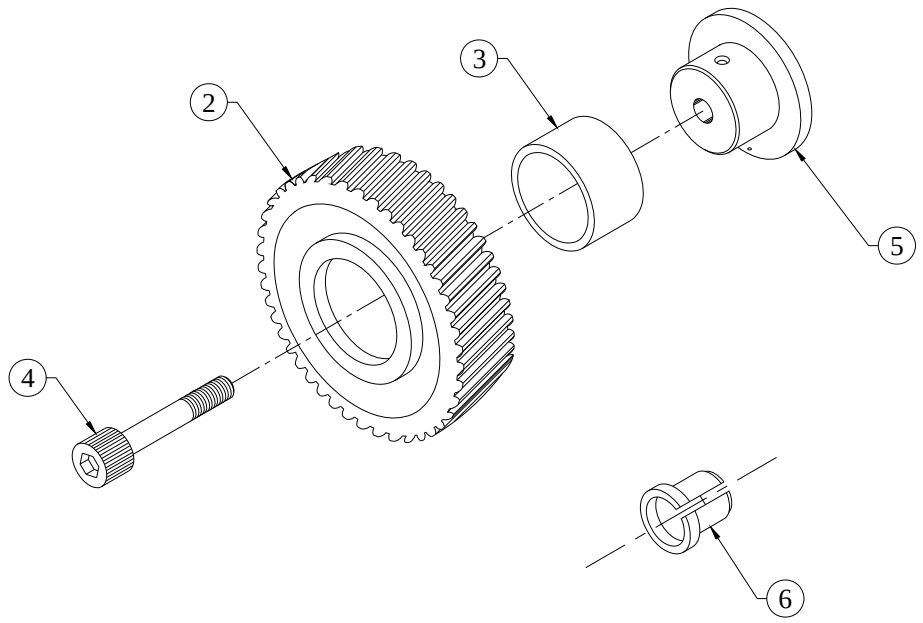

SR.NO.	PART NO.	DESCRIPTION	QTY.	REMARKS
*1	03.008.10.0.00	INTERMEDIATE GEAR ASSLY	1	CONSIST OF SR. NO. 2 & 3
2	03.008.01.0.00	INTERMEDIATE GEAR	1	NOT SUPPLIED LOOSE
3	03.008.02.9.00	BEARING BUSH FOR INTERMEDIATE GEAR	1	NOT SUPPLIED LOOSE
4	50.076.10.060.	SOCKET HEAD CAP SCREW-M10X60-12.9	1	
5	03.008.05.0.00	INTERMEDIATE GEAR SUPPORT	1	
6	03.008.06.0.00	SPLIT BUSH FOR SUPPORT	1	

TITLE: -KIT GROUP FOR CC GENSET. (FASTNERS.) FOR UC224 ALT.	**GROUP: -** 02.511.3

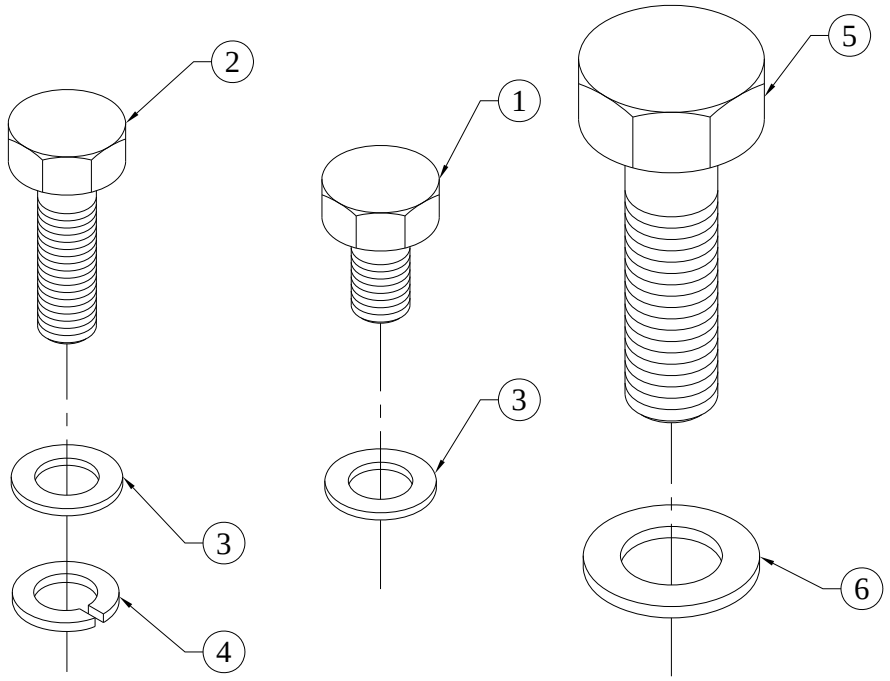

SR.NO.	PART NO.	DESCRIPTION	QTY.	REMARKS
1	50.003.10.025.	SET SCREW - M10X1.5X25 - 8.8	8	
2	50.003.10.035.	SET SCREW - M10X1.5X35 - 8.8	12	
3	02.438.23.0.00	HARD WASHER (11 I.D. X 19 O.D. X 1.5 TH)	20	
4	50.505.10.000.	SPRING WASHER - M10	8	
5	50.003.16.045.	SET SCREW - M16X2X45 - 8.8	2	
6	F6.811.04.0.00	HARD WASHER (ID 17,OD 35,THK 5)	2	

TITLE: -4-20mA LOP AND WT SENSOR UNIT FOR EXPORT (WITHOUT WATER TEMP SWITCH)	**GROUP: -**2H.092.13

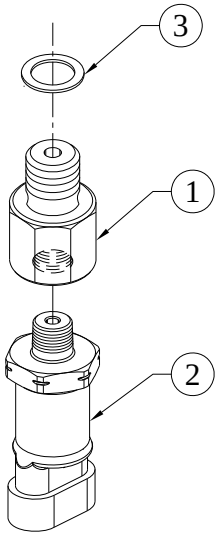

SR.NO.	PART NO.	DESCRIPTION	QTY.	REMARKS
1	4H.235.01.0.00	ADAPTOR FOR L.O. PRESSURE SENSOR (M10 X 1.5 X 1/8" NPTF)	1	
2	DV0.812.11.0.00	4-20 mA LUBE OIL PRESSURE SENSOR GEMS MAKE 3100 SERIES	1	
3	50.508.08.000	COPPER WASHER (10X16)	1	

TITLE: -LOWER COWLING	**GROUP: -** 06.019

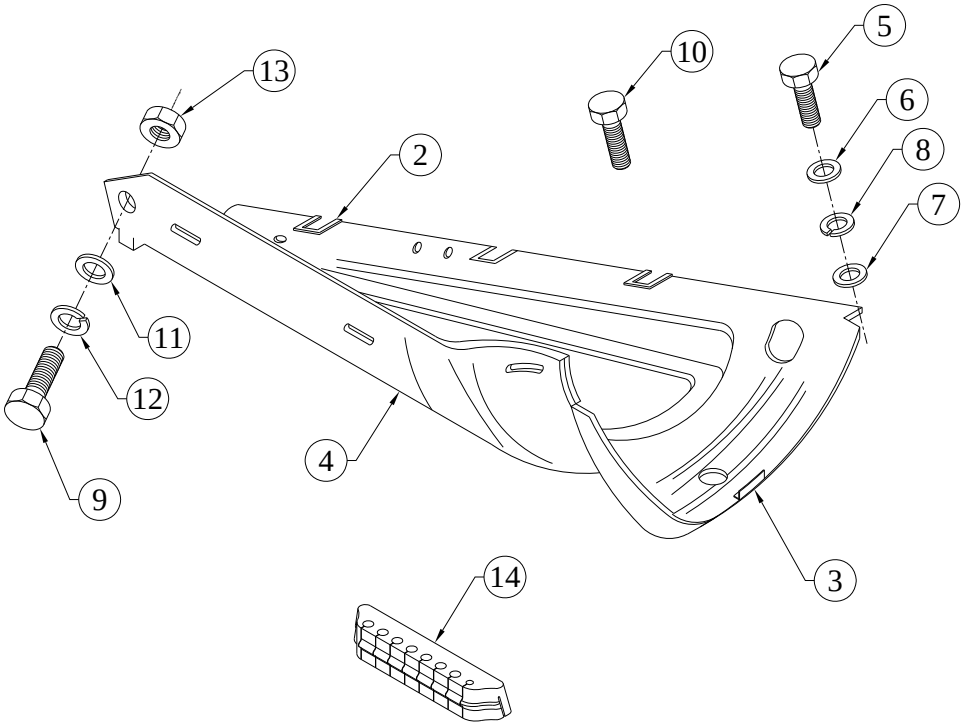

SR.NO.	PART NO.	DESCRIPTION	QTY.	REMARKS
*1	06.019.10.0.00	SUB ASSY OF LOWER COWLING	1	CONSISTING OF SR. NO.- 2 TO 4
2	03.019.02.0.00	REINFORCING PLATE	2	
3	03.029.03.0.00	WELDED ANGLE PIECE	1	
4	06.019.01.0.00	LOWER COWLING	1	
5	50.003.08.016.	SET SCREW - M8X1.25X16 - 8.8	3	
6	50.548.08.000.	SPL.PLAIN M/CED WASHER	1	
7	50.506.08.000.	PLAIN MACHINED WASHER - M8	3	
8	50.505.08.000.	SPRING WASHER - M8	4	
9	50.003.06.014.	SET SCREW - M6X1X14 - 8.8	1	
10	50.003.08.020.	SET SCREW - M8X1.25X20 - 8.8	1	
11	03.023.02.0.00	SPL. PLAIN WASHER - M6	2	
12	50.505.06.000.	SPRING WASHER - M6	1	
13	50.006.06.000.	NUT - M6X1 - GR.8	1	
14	03.019.05.0.00	RUBBER GROMMET	1	

TITLE: -LUB OIL CONNECTIONS FOR K26 TURBOCHARGER	**GROUP: -** 06.767

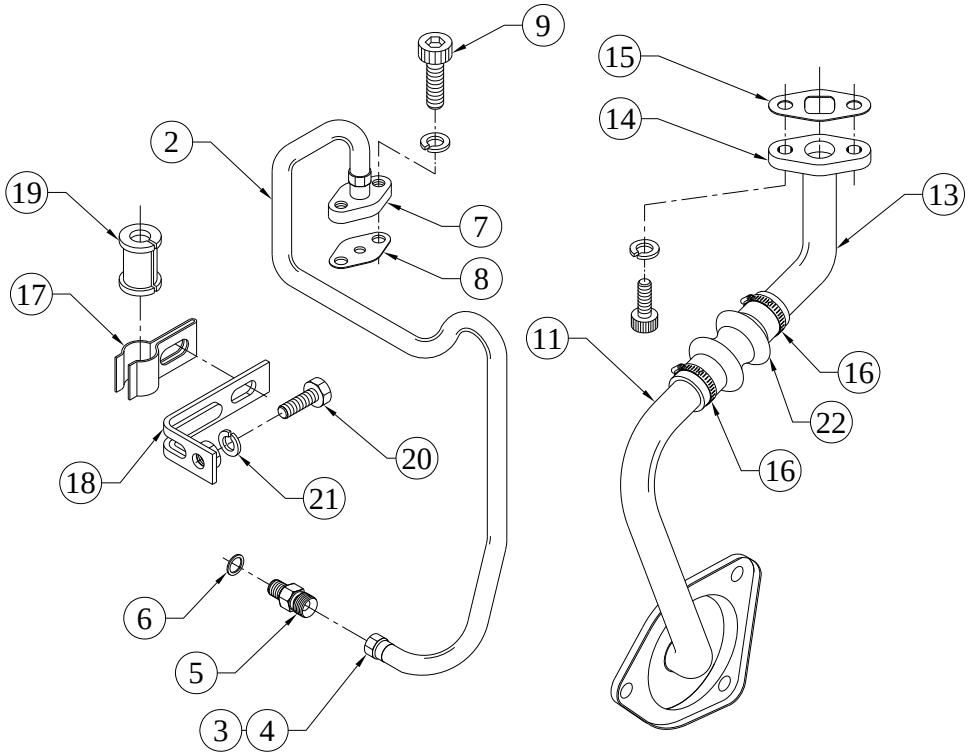

SR.NO.	PART NO.	DESCRIPTION	QTY.	REMARKS
*1	06.767.10.0.00	ASSEMBLY OF LUB OIL INLET PIPE	1	CONSIST OF SR. NO. 2 TO 4
2	06.767.01.0.00	LUB OIL INLET PIPE FOR K26 TURBO	1	
3	06.635.06.0.00	NIPPLE	2	
4	06.635.07.0.00	UNION NUT	2	
5	04.574.06.0.00	ADAPTOR FOR LUB OIL PIPE ON CRANCKCASE	1	
6	50.508.10.000.	COPPER WASHER (12X18)	1	
7	4H.132.02.0.00	ADAPTOR (TURBOCHARGER SIDE)	1	
8	4H.132.27.0.00	JOINT FOR ADAPTOR (TURBO SIDE)	1	
9	50.011.08.025.	SOCKET HEAD SCREW - M8X1.25X25 - 8.8	4	
*10	06.767.20.0.00	SUB ASSEMBLY OF LUB OIL DRAIN PIPE (LONG)	1	CONSIST OF SR. NO. 11
11	06.767.03.0.00	LUB OIL DRAIN PIPE (LONG)	1	

TITLE: -LUB OIL CONNECTIONS FOR K26 TURBOCHARGER	**GROUP: -** 06.767

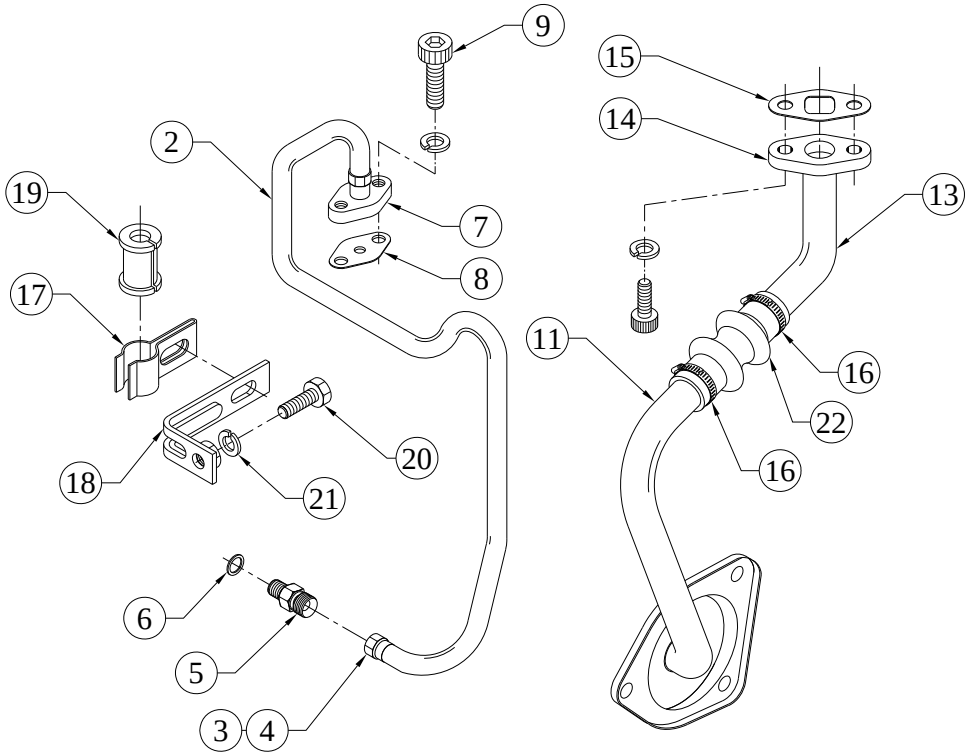

SR.NO.	PART NO.	DESCRIPTION	QTY.	REMARKS
*12	06.767.30.0.00	SUBASSEMBLY OF LUB OIL DRAIN PIPE(SHORT)	1	CONSIST OF SR. NO. 13,14
13	06.767.02.0.00	LUB OIL DRAIN PIPE (SHORT)	1	
14	04.574.05.0.00	FLANGE FOR LUB OIL DRAIN	1	
15	4H.132.29.0.00	JOINT FOR LUB OIL DRAIN PIPE	1	
16	50.519.06.000.	HOSE CLIP (30 MM) For 48.019.02.0.00, 40.149.02.0.00	2	
17	04.574.07.0.00	CLIP FOR LUB OIL INLET PIPE	1	
18	04.574.08.0.00	BRACKET FOR CLIP MOUNTING	1	
19	04.574.09.0.00	RUBBER SLEEVE FOR LUB OIL PIPE	1	
20	50.003.08.020.	SET SCREW - M8X1.25X20 - 8.8	1	
21	50.505.08.000.	SPRING WASHER - M8	5	
22	04.574.04.0.00	HOSE FORLUB OIL DRAIN(TURBO)	1	

TITLE: -LUB OIL COOLER	**GROUP: -** 06.020

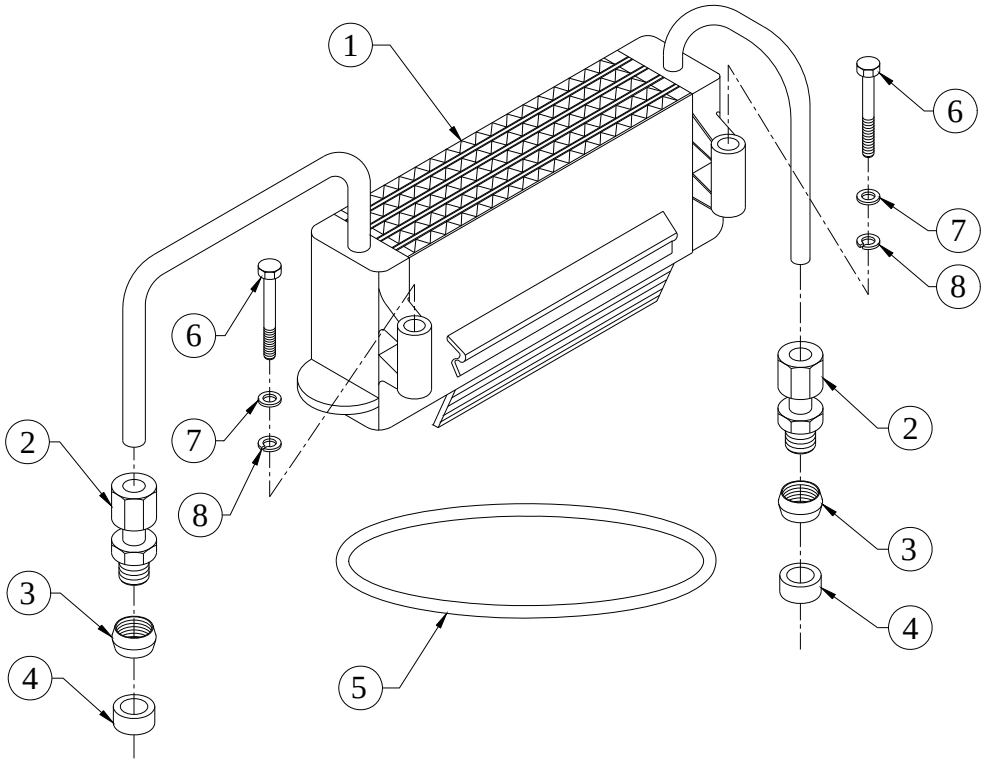

SR.NO.	PART NO.	DESCRIPTION	QTY.	REMARKS
1	06.020.01.0.00	LUB OIL COOLER	1	
2	03.020.02.0.00	UNION SCREW	2	
3	03.020.03.0.00	DOUBLE CONE RING	2	
4	03.020.05.0.00	RUBBER BUSH	2	
5	06.020.05.0.00	SEALING RING (SOLID) HA6 REGULAR	1	
6	50.002.08.080.	SET BOLT - M8X1.25X80 - 8.8	2	
7	50.548.08.000.	SPL.PLAIN M/CED WASHER	2	
8	50.505.08.000.	SPRING WASHER - M8	2	

TITLE: - LUB OIL FILTER & MTG (SPINON, COMMON HEADER) WITH ASBESTOSS FREE JOINT	**GROUP: -** 06.436…EXP

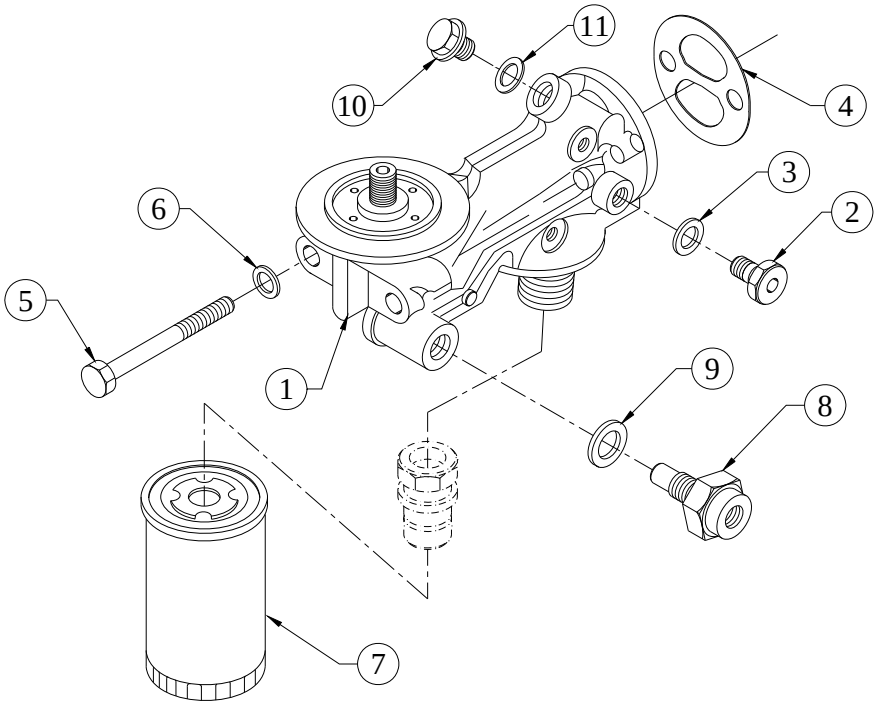

SR.NO.	PART NO.	DESCRIPTION	QTY.	REMARKS
1	04.268.01.0.00	FILTER HEADER (FOR L.O.& FUEL FILTER)	1	
2	04.268.05.0.00	REDUCING NIPPLE (KHD NO 0223 2699)	1	
3	50.508.13.000	COPPER WASHER (16X20)	1	
4	03.040.07.0.00	JOINT FOR L.O FILTER (ASBESTOSS FREE)	1	
5	50.002.10.160	SET BOLT - M10X1.5X160 - 8.8	2	
6	50.506.10.000	PLAIN MACHINED WASHER - M10	2	
7	06.436.01.0.00	SPIN ON FILTER FOR LUBRICATING OIL	1	
8	03.067.01.0.00	ADAPTOR FOR TEMP GUAGE	1	
9	50.508.12.000.	COPPER WASHER (14X20)	1	
10	50.602.10.000	CORE PLUG	1	
11	50.508.08.000.	COPPER WASHER (10X16)	1	

TITLE: -LUB OIL PUMP	**GROUP: -** 06.010

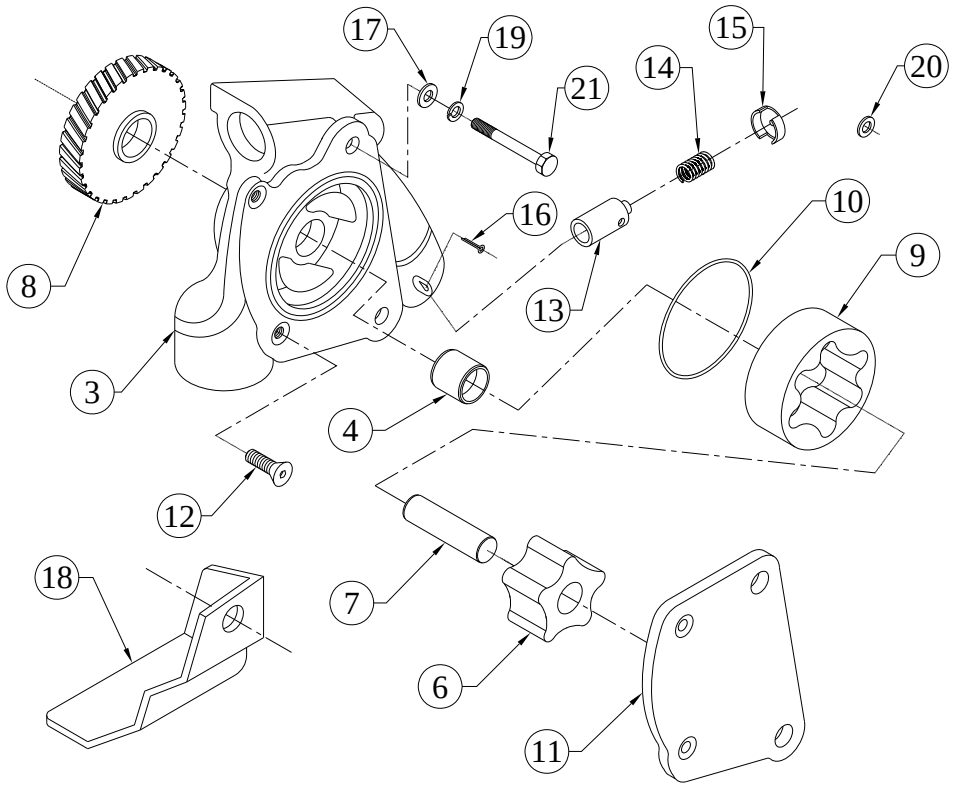

SR.NO.	PART NO.	DESCRIPTION	QTY.	REMARKS
*1	06.010.60.0.00	LUB OIL PUMP ASSLY.	1	CONSISTING OF SR. NO.- 2, 5, 8 TO 19
*2	06.010.15.0.00	SUB.ASSLY.OF L.O.PUMP BODY & BUSH.	1	CONSISTING OF SR. NO.- 3 & 4
3	06.010.11.0.00	LUBE.OIL PUMP BODY(FINISH)	1	NOT SUPPLIED LOOSE
4	03.010.05.0.00	BUSH FOR L.O.PUMP BODY	1	NOT SUPPLIED LOOSE
*5	06.010.70.0.00	ROTOR SUB.ASSLY.	1	CONSISTING OF SR. NO.- 6 & 7
6	06.010.16.0.00	INNER ROTOR (WITHOUT KEY)	1	NOT SUPPLIED LOOSE
7	06.010.18.0.00	SHAFT FOR INNER ROTOR	1	NOT SUPPLIED LOOSE
8	03.010.19.0.00	DRIVING GEAR (FOR LUB.OIL PUMP)	1	NOT SUPPLIED LOOSE
9	06.010.17.0.00	OUTER ROTOR	1	NOT SUPPLIED LOOSE

TITLE: -LUB OIL PUMP	**GROUP: -** 06.010

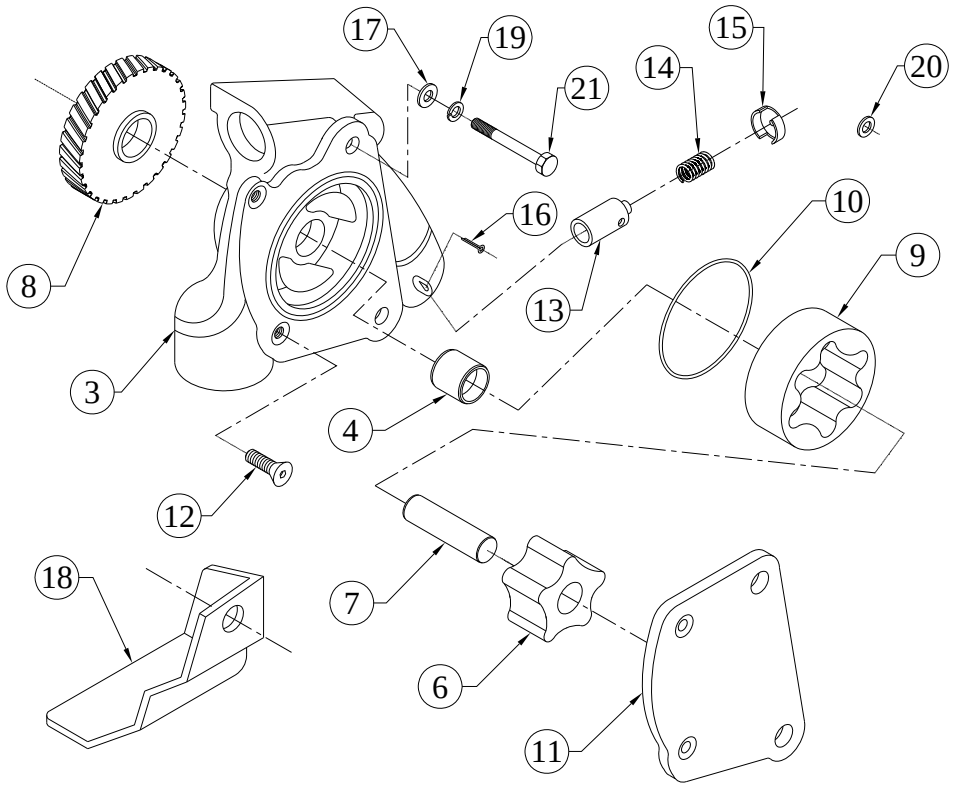

SR.NO.	PART NO.	DESCRIPTION	QTY.	REMARKS
10	03.010.11.0.00	O RING - L.O.PUMP (1.57X65,21508)	1	
11	03.010.12.0.00	COVER PLATE HA3	1	NOT SUPPLIED LOOSE
12	06.010.01.0.00	COUNTER SUNK SOCKET HEAD SCREW.	2	
13	03.010.13.0.00	RELIEF VALVE	1	NOT SUPPLIED LOOSE
14	03.010.14.0.00	SPRING FOR RELIEF VALVE	1	NOT SUPPLIED LOOSE
15	03.010.15.0.00	CUP FOR SPRING	1	NOT SUPPLIED LOOSE
16	50.036.07.010.	SPLIT COTTER PIN - 1/8"X1-1/2"	1	
17	06.010.07.0.00	WASHER	1	
18	03.010.02.0.00	SCREEN PLATE	1	
19	50.505.08.000.	SPRING WASHER - M8	2	
20	50.506.08.000.	PLAIN MACHINED WASHER - M8	2	
21	50.002.08.060.	SET BOLT - M8X1.25X60 - 8.8	2	

TITLE: -LUB OIL SUMP(20 DEG INCLINATION)	**GROUP: -** 06.074

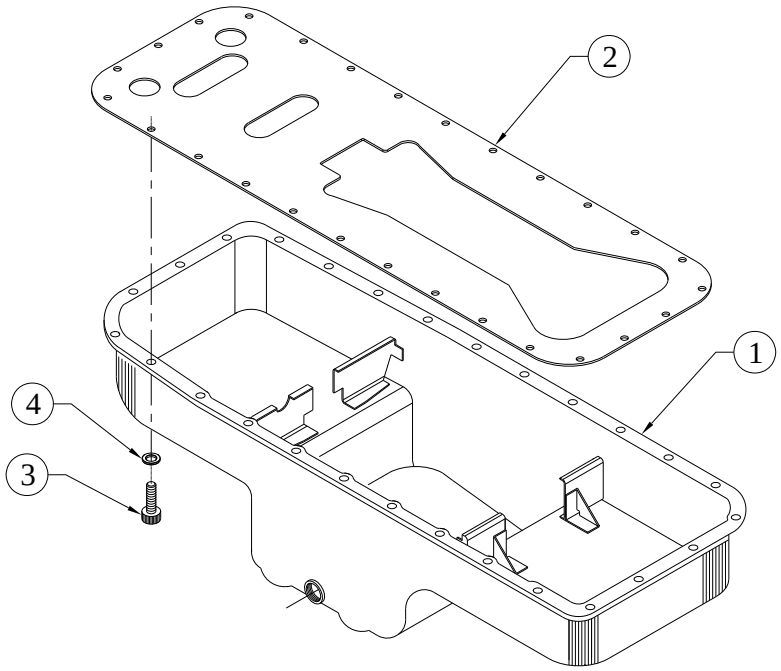

SR.NO.	PART NO.	DESCRIPTION	QTY.	REMARKS
1	06.074.30.0.00	LUB OIL SUMP (FLAT FACE)	1	
2	06.074.14.0.00	SPACER PLATE (KHD NO 0416 1492)	1	
3	50.011.08.016.	SOCKET HEAD SCREW - M8X1.25X16 - 8.8	27	
4	06.074.16.0.00	WASHER(SHEET METAL L.O.SUMP)	27	

TITLE: -LUBE OIL DRAIN PUMP AND MOUNTING ARRANGEMENT	**GROUP: -** 3H.345.25

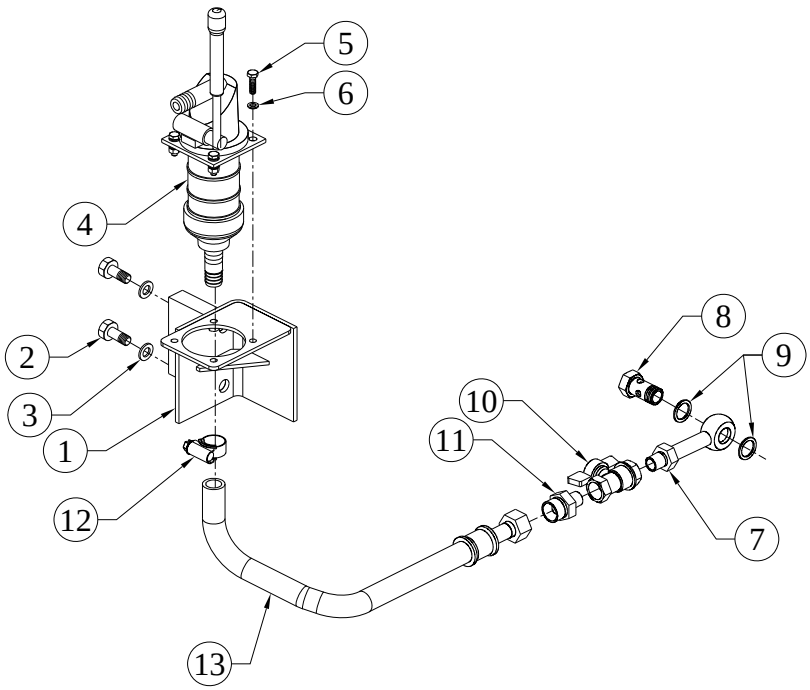

SR.NO.	PART NO.	DESCRIPTION	QTY.	REMARKS
1	02.1268.09.0.PR	BRACKET FOR HAND PUMP MOUNTING	1	
2	50.002.12.090.	SET BOLT - M12X1.75X90 - 8.8	2	
3	50.506.12.000.	PLAIN MACHINED WASHER - M12	2	
4	3H.345.10.0.00	LUB. OIL DRAIN HAND PUMP ASSEMBLY (SAM INTEGRATION PVT. LTD, PUNE)	1	
5	50.003.06.020.	SET SCREW - M6X1X20 - 8.8	4	
6	50.506.06.000.	PLAIN MACHINED WASHER - M6	4	
7	3H.147.09.0.00	ADAPTOR FOR LUB OIL DRAIN	1	
8	50.504.06.000.	BANJO BOLT - M18X1.5	1	
9	50.508.17.000.	COPPER WASHER (18X24)	2	
10	3H.153.11.0.00	DRAIN COCK	1	
11	3H.147.03.0.00	ADAPTOR FOR OIL SUMP (MALE BOTH SIDE TYPE)	1	
12	2H.064.03.0.00	WORM DRIVE HOSE CLIP (JUPITOR JW7B9, 20 - 25 DIA)	2	
13	4H.1285.07.0.00	LUB. OIL SUMP DRAIN PIPE S/F NEW LUB. OIL HAND PUMP	1	

TITLE: -NAME PLATE	**GROUP: -** 38.065

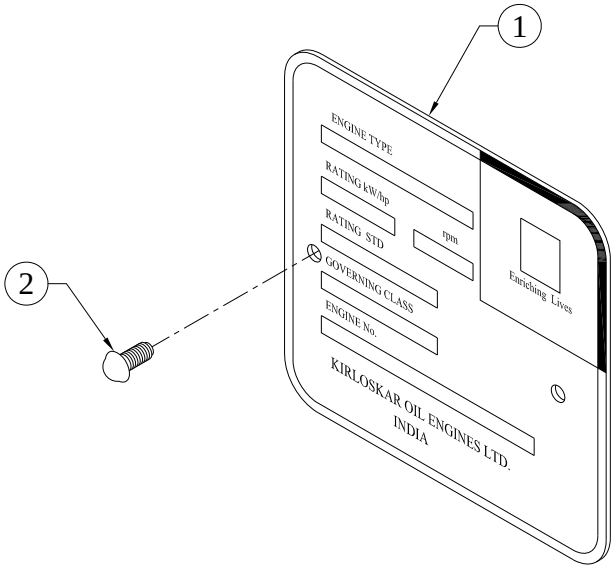

SR.NO.	PART NO.	DESCRIPTION	QTY.	REMARKS
1	38.065.03.0.00	NAME PLATE	1	
2	10.046.02.0.00	P K DRIVE SCREW 1/8"X3/8" (RIVET)	2	

TITLE: -NAME PLATE FOR KG GENSET	**GROUP: -** 3H.227

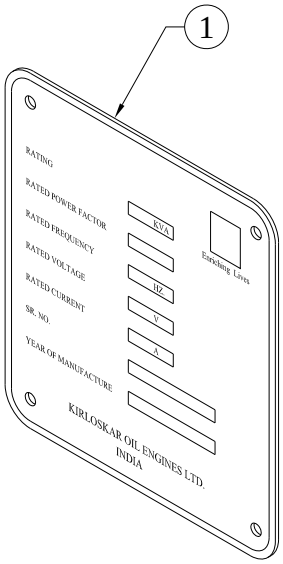

SR.NO.	PART NO.	DESCRIPTION	QTY.	REMARKS
1	3H.227.01.0.00	NAME PLATE FOR GENSET	1	

TITLE: - NOZZLE LEAK OFF PIPE (CPCB)	**GROUP: -** 06.819

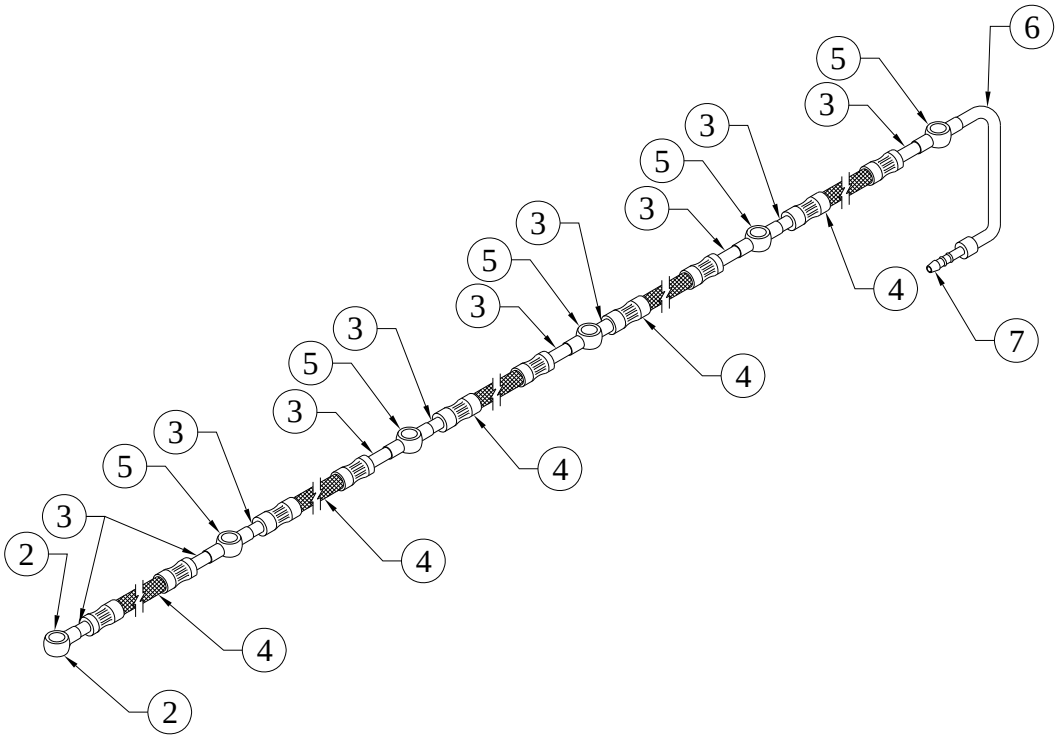

SR.NO.	PART NO.	DESCRIPTION	QTY.	REMARKS
*1	06.819.20.0.00	NOZZLE LEAK OFF PIPE	1	CONSISTING OF SR.NO. 2 TO 7
2	F6.043.01.0.00	BANJO	1	NOT SUPPLIED LOOSE
3	02.500.14.0.00	PIPE SHORT 4.75 OD X 0.75 THK	10	NOT SUPPLIED LOOSE
4	02.500.15.0.00	HOSE PIPE 4.6 I.D. X 11 O.D. X 80 L	5	NOT SUPPLIED LOOSE
5	02.500.13.0.PR	TWO WAY BANJO (FOR M6 BANJO BOLT)	5	NOT SUPPLIED LOOSE
6	02.500.16.0.00	PIPE LONG 4.75 OD X 0.75 THK	1	NOT SUPPLIED LOOSE
7	02.525.02.0.00	HOSE TAIL	1	NOT SUPPLIED LOOSE

TITLE:- OIL BATH AIR CLEANER W/O PRE CLEANER	**GROUP:-** 06.605

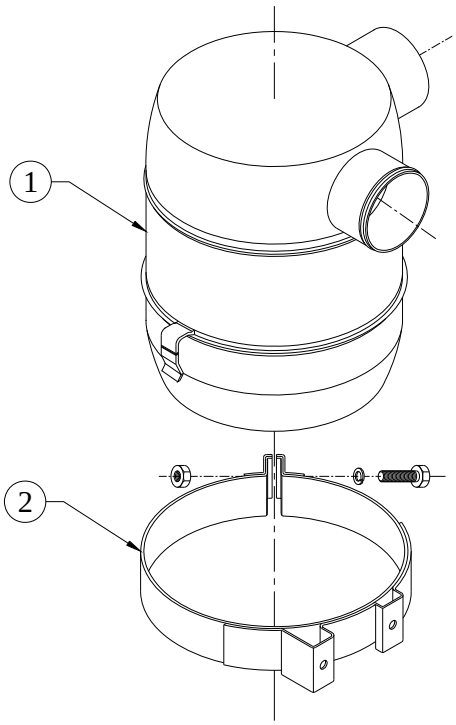

SR.NO.	PART NO.	DESCRIPTION	QTY.	REMARKS
1	06.048.01.0.00	AIR CLEANER OIL BATH	1	NOT SUPPLIED LOOSE
2	06.048.05.0.00	AIR CLEANER CLAMP	1	

TITLE: - OIL FILLER CAP	**GROUP: -** 03.042

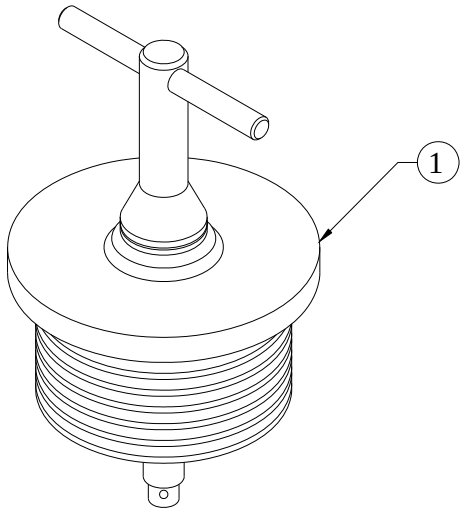

SR.NO.	PART NO.	DESCRIPTION	QTY.	REMARKS
1	34.036.60.0.00	CAP ASSLY	1	

TITLE: - OIL SEAL HOUSING F W E	**GROUP: -** 03.007

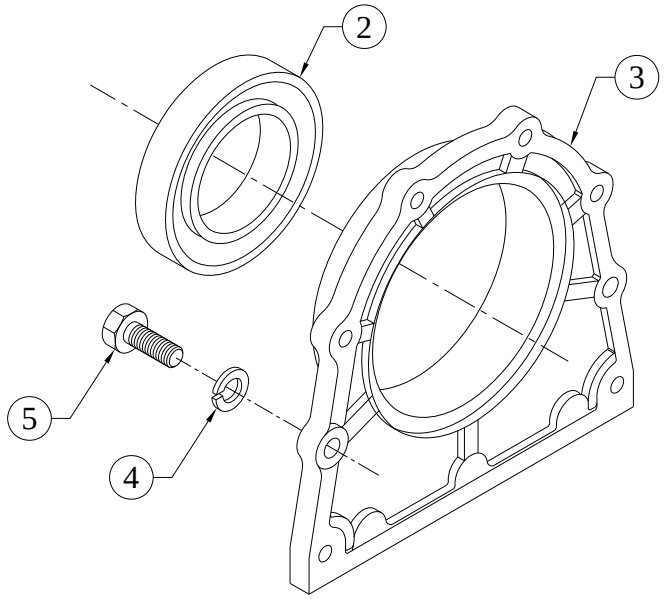

SR.NO.	PART NO.	DESCRIPTION	QTY.	REMARKS
*1	03.007.50.0.00	FWE OIL SEAL HOUSING WITH CR MAKE SEAL	1	CONSISTING OF SR. NO. 2 & 3
2	03.007.06.0.00	OIL SEAL(115X140X12) CR MAKE	1	
3	03.007.01.0.00	OIL SEAL HOUSING (F)	1	
4	50.505.08.000.	SPRING WASHER - M8	8	
5	50.003.08.020.	SET SCREW - M8X1.25X20 - 8.8	8	

TITLE :- OIL SPRAY NOZZLE	**GROUP :-** 02.002

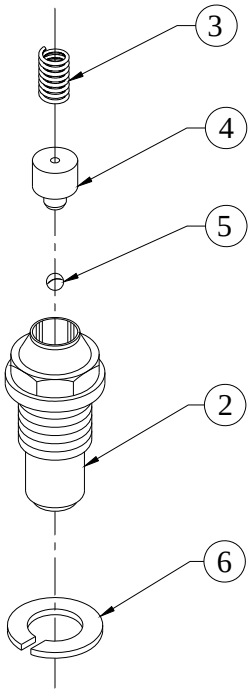

SR.NO.	PART NO.	DESCRIPTION	QTY.	REMARKS
*1	02.002.10.0.00	OIL SPRAY NOZZLE ASSY	1	CONSISTING OF SR. NO.- 2 TO 5
2	02.002.01.0.00	OIL SPRAY NOZZLE BODY	1	NOT SUPPLIED LOOSE
3	02.002.02.0.00	SPRING	1	NOT SUPPLIED LOOSE
4	02.002.03.0.00	BUSH	1	NOT SUPPLIED LOOSE
5	02.002.04.0.00	STEEL BALL	1	NOT SUPPLIED LOOSE
6	02.002.05.0.00	SPRING WASHER (M8)	1	

TITLE :- POWER HARNESS FROM ALTERNATOR TO CONTROL PANEL	**GROUP :-** 6H.907

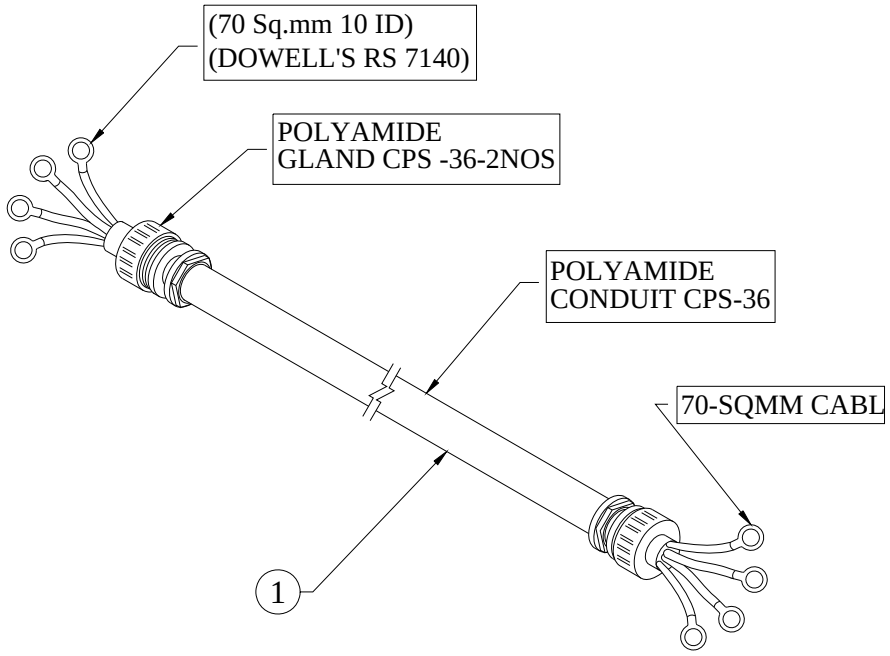

SR.NO.	PART NO.	DESCRIPTION	QTY.	REMARKS
1	6H.907.10.0.00	POWER HARNESS FROM ALTERNATOR TO CONTROL PANEL, 70 SQMM (NEUTRAL 35 SQMM), 3 PHASES, WITH POLYAMIDE CONDUIT OF GLAND SIZE FNC PG 48. CABLE LENGTH 2000MM, CONDUIT LENGTH 1400MM	1	

TITLE: -REAR COWLING	**GROUP: -** 03.023

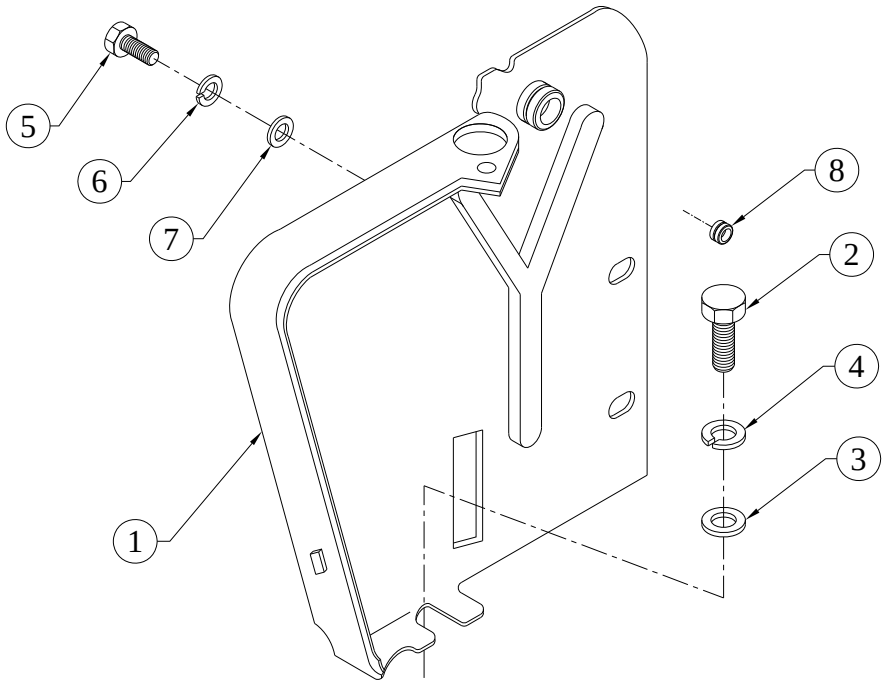

SR.NO.	PART NO.	DESCRIPTION	QTY.	REMARKS
1	03.023.01.0.00	REAR COWLING	1	
2	50.003.08.016.	SET SCREW - M8X1.25X16 - 8.8	1	
3	50.506.08.000.	PLAIN MACHINED WASHER - M8	1	
4	50.505.08.000.	SPRING WASHER - M8	1	
5	50.003.06.014.	SET SCREW - M6X1X14 - 8.8	3	
6	50.505.06.000.	SPRING WASHER - M6	3	
7	03.023.02.0.00	SPL. PLAIN WASHER - M6	3	
8	02.029.04.0.00	RUBBER GROMMET	1	

TITLE:-RUBBER HOSE (82 X 82 X 90 DEG) FOR AIR CLEANER	**GROUP:-** 06.820.01

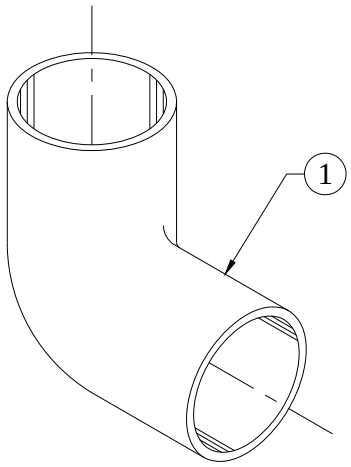

SR.NO.	PART NO.	DESCRIPTION	QTY.	REMARKS
1	06.820.01.0.00	RUBBER HOSE (82 X 82 X 90 DEG) FOR AIR CLEANER	1	

TITLE: - SENSOR FOR TEMPERATURE GAUGE	**GROUP: -** 46.065.1

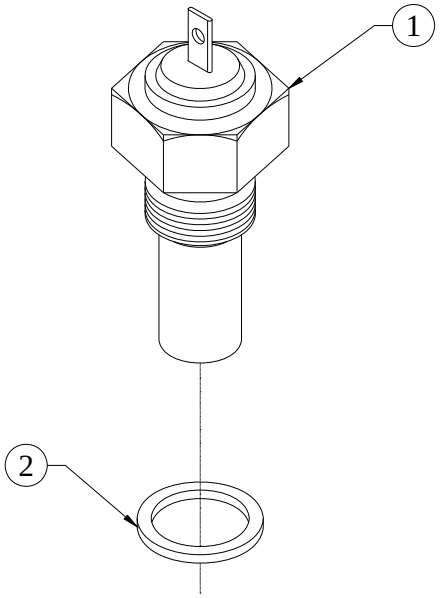

SR.NO.	PART NO.	DESCRIPTION	QTY.	REMARKS
1	46.085.02.0.00	SENSOR UNIT (FOR ELEC TEMP GAUGE)	1	
2	50.508.11.000.	COPPER WASHER (14X18)	1	

TITLE: -SPARES FOR HA6TC ENGINE	**GROUP: -** 06.1047.1

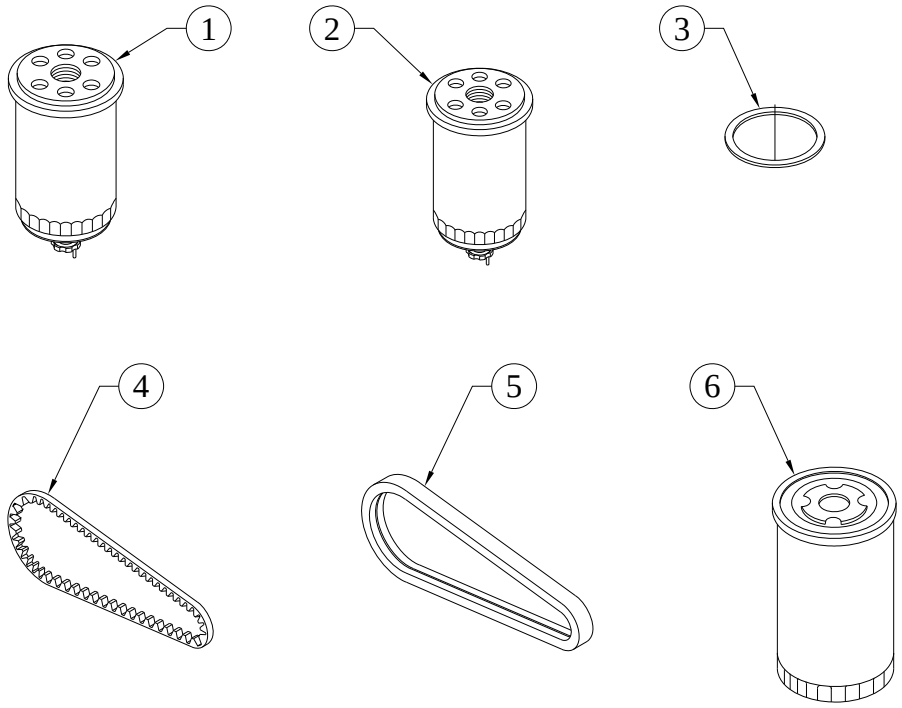

SR.NO.	PART NO.	DESCRIPTION	QTY.	REMARKS
1	3H.132.01.0.00	PRIMARY ELEMENT	1	
2	3H.132.02.0.00	SECONDARY ELEMENT	1	
3	3H.132.03.0.00	SEALING RING (FUEL FILTER)	2	
4	04.140.01.0.00	V BELT (A-47) 1227 LENGTH	1	
5	06.032.03.0.00	BANDED COGGED BELT (2JAX51 - LP -1326)	1	
6	06.436.01.0.00	SPIN ON FILTER FOR LUBRICATING OIL	1	

TITLE: -SPEED ADJUSTING UNIT (FIXED SPEED) S/F VERTICAL PUMP MOUNTED STOP SOLENOID	**GROUP: -** 03.065.1

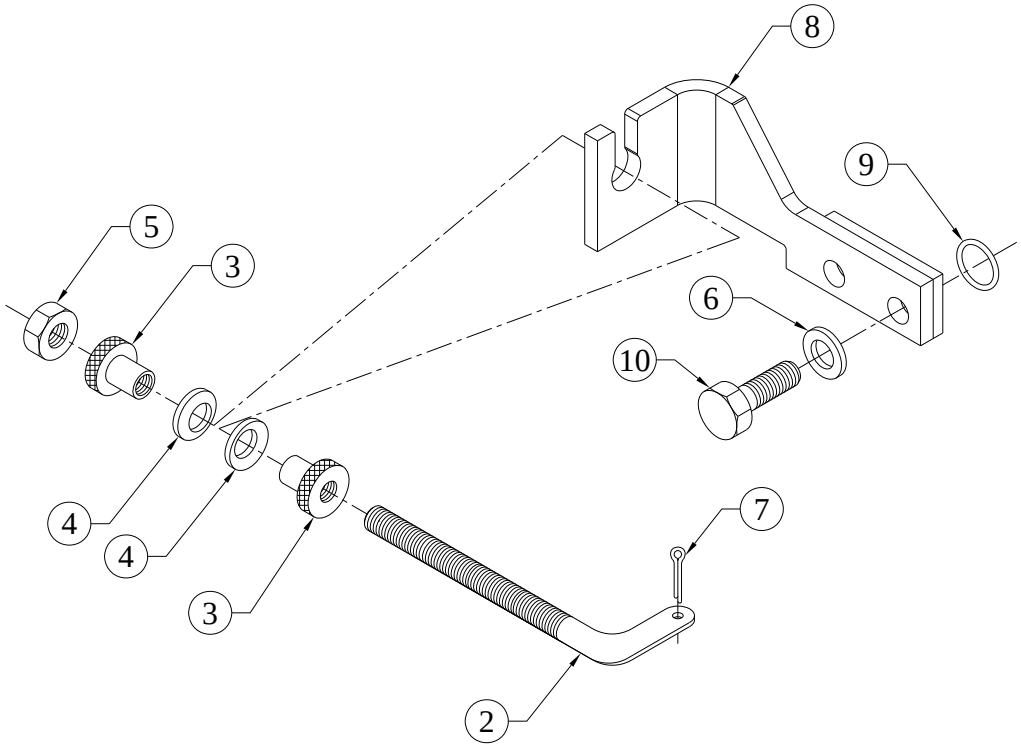

SR.NO.	PART NO.	DESCRIPTION	QTY.	REMARKS
*1	03.065.30.0.00	ASSLY OF SPEED ADJUSTMENT UNIT S/F PUMP MOUNTED STOP SOLENOID	1	CONSISTING OF SR. NO. 2 TO 5
2	4H.122.02.0.00	BAR FOR SPEED ADJUSTMENT	1	
3	03.065.04.0.00	KNURLED NUT	2	
4	03.065.05.0.00	SPHERICAL WASHER	2	
5	50.006.06.000.	NUT - M6X1 - GR.8	1	
6	50.506.06.000.	PLAIN MACHINED WASHER - M6	2	
7	50.036.03.001.	SPLIT COTTER PIN - 1/16"X1/2"	1	
8	03.508.13.0.00	FIXED SPEED BRACKET FOR HA294 FOR NEW MICO PUMP MOUNTED STOP SOLENOID	1	
9	03.036.01.0.00	O RING - DIPSTICK (2X5,21515 OR 21511)	2	
10	50.003.06.016.	SET SCREW - M6X1X16 - 8.8	2	

TITLE: -STAMFORD ALTERNATOR UC2244G, 75KVA, 220V, 60HZ, 3PH. SAE-3/11.5"	**GROUP: -** 06.1238

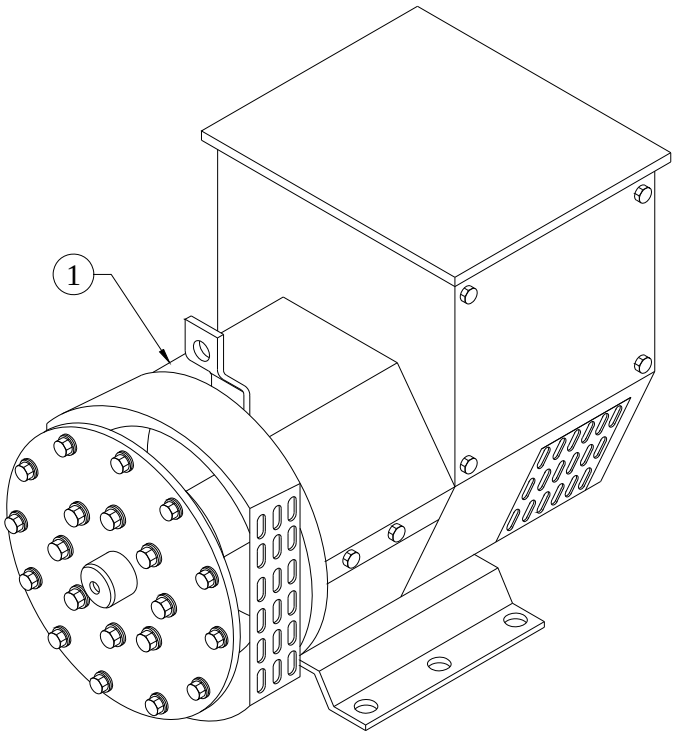

SR.NO.	PART NO.	DESCRIPTION	QTY.	REMARKS
1	06.1238.01.0.00	STAMFORD ALTERNATOR UC2244G,75KVA,220V,60HZ,3PH., SAE-3/11.5"	1	

TITLE: -STAMFORD ALTERNATOR UC2244G, 75KVA, 220V, 60HZ, 3PH. SAE-3/11.5"	**GROUP: -** 06.1238

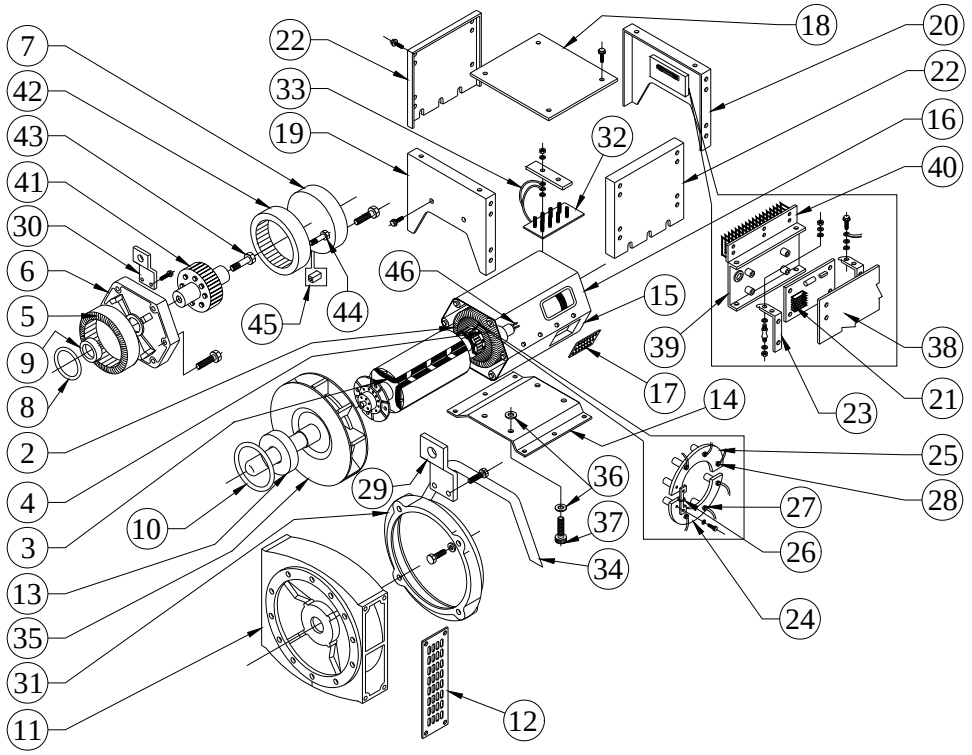

SR.NO.	PART NO.	DESCRIPTION	QTY.	REMARKS
2	4H.823.02.0.00	STATOR FOR UC224 ALTERNATOR	1	
3	4H.823.03.0.00	ROTOR FOR UC224 ALTERNATOR	1	
4	4H.823.04.0.00	EXCITER ROTOR FOR UC224 ALTERNATOR	1	
5	4H.823.05.0.00	EXCITOR STATOR FOR UC224 ALTERNATOR	1	
6	4H.823.06.0.00	NON DRIVE END BRACKET FOR UC224 ALTERNATOR	1	
7	4H.823.07.0.00	COVER NON DRIVE END FOR UC224 ALTERNATOR (NEWAGE PART NO.-CG450-14360)	1	
8	4H.823.08.0.00	BEARING O RING NON DRIVE END FOR UC224 ALTERNATOR (NEWAGE PART NO.-051-21784)	1	
9	4H.823.09.0.00	BEARING NON DRIVE END FOR UC224 ALTERNATOR (NEWAGE PART NO.-051-01032)	1	

TITLE: -STAMFORD ALTERNATOR UC2244G, 75KVA, 220V, 60HZ, 3PH. SAE-3/11.5"	**GROUP: -** 06.1238

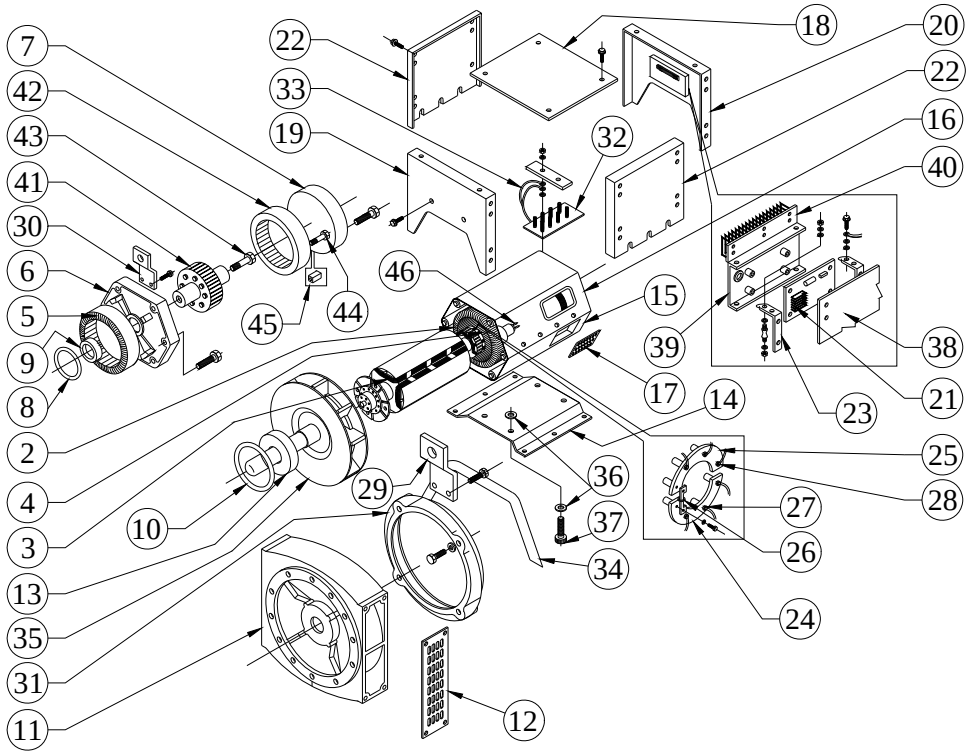

SR.NO.	PART NO.	DESCRIPTION	QTY.	REMARKS
10	4H.823.11.0.00	BEARING WAVE WASHER DRIVE END FOR UC224 ALTERNATOR	1	
11	4H.823.12.0.00	DRIVE END BRACKET FOR UC224 ALTERNATOR	1	
12	4H.823.13.0.00	DRIVE END SCREEN FOR UC224 ALTERNATOR	1	
13	4H.823.14.0.00	BEARING DRIVE END FOR UC224 ALTERNATOR (NEWAGE PART NO.-	1	
14	4H.823.15.0.00	FOOT FOR UC224 ALTERNATOR	1	
15	4H.823.16.0.00	FRAME COVER BOTTOM FOR UC224 ALTERNATOR	1	
16	4H.823.17.0.00	FRAME COVER TOP FOR UC224 ALTERNATOR	1	
17	4H.823.18.0.00	AIR INLET COVER FOR UC224 ALTERNATOR	1	
18	4H.823.19.0.00	TERMINAL BOX LID FOR UC224 ALTERNATOR	1	

TITLE: -STAMFORD ALTERNATOR UC2244G, 75KVA, 220V, 60HZ, 3PH. SAE-3/11.5"	**GROUP: -** 06.1238

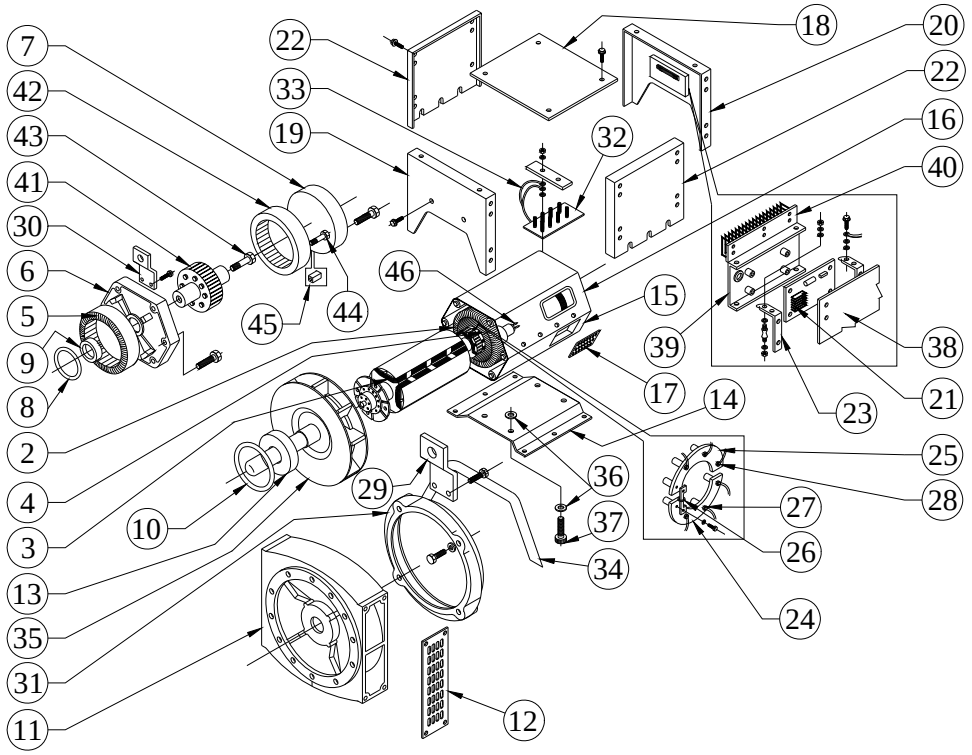

SR.NO.	PART NO.	DESCRIPTION	QTY.	REMARKS
19	4H.823.21.0.00	END PANEL DRIVE END FOR UC224 ALTERNATOR	1	
20	4H.823.22.0.00	END PANEL NON DRIVE END FOR UC224 ALTERNATOR	1	
21	4H.823.23.0.00	AUTOMATIC VOLTAGE REGULATOR FOR UC224 ALTERNATOR (NEWAGE PART NO.-E00023410)	1	
22	4H.823.24.0.00	SIDE PANEL FOR UC224 ALTERNATOR	1	
23	4H.823.25.0.00	AUTOMATIC VOLTAGE REGULATOR MOUNTING BRACKET FOR UC224 ALTERNATOR	1	
24	4H.823.26.0.00	MAIN RECTIFIER ASSEMBLY FORWARD FOR UC224 ALTERNATOR	1	

TITLE: -STAMFORD ALTERNATOR UC2244G, 75KVA, 220V, 60HZ, 3PH. SAE-3/11.5"	**GROUP: -** 06.1238

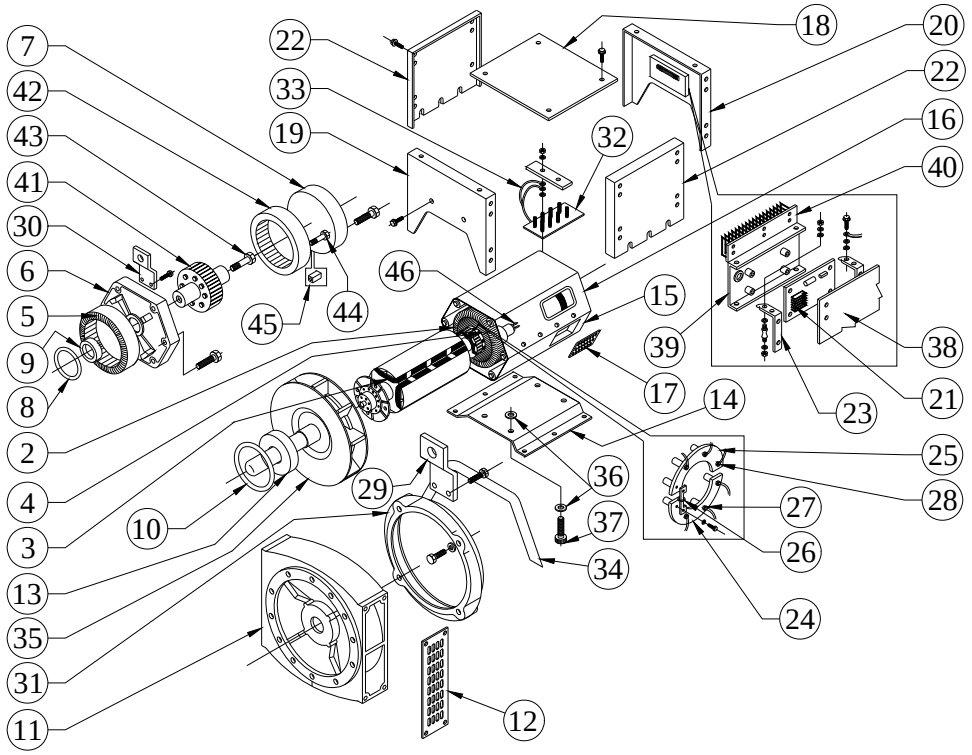

SR.NO.	PART NO.	DESCRIPTION	QTY.	REMARKS
25	4H.823.27.0.00	MAIN RECTIFIER ASSEMBLY REVERSE FOR UC224 ALTERNATOR	1	
26	4H.823.28.0.00	VARISTOR FOR UC224 ALTERNATOR (NEWAGE PART NO.-073-08059)	1	
27	4H.823.29.0.00	DIODE FORWARD POLARITY FOR UC224 ALTERNATOR	3	
28	4H.823.31.0.00	DIODE REVERSE POLARITY FOR UC2274 ALTERNATOR	3	
29	4H.823.32.0.00	LIFTING LUG -DRIVE END FOR UC224 ALTERNATOR	1	
30	4H.823.33.0.00	LIFTING LUG - NON DRIVE END FOR UC224 ALTERNATOR	1	
31	4H.823.34.0.00	FRAME TO END BRACKET ADAPTOR RING FOR UC224 ALTERNATOR	1	

TITLE: -STAMFORD ALTERNATOR UC2244G, 75KVA, 220V, 60HZ, 3PH. SAE-3/11.5"	**GROUP: -** 06.1238

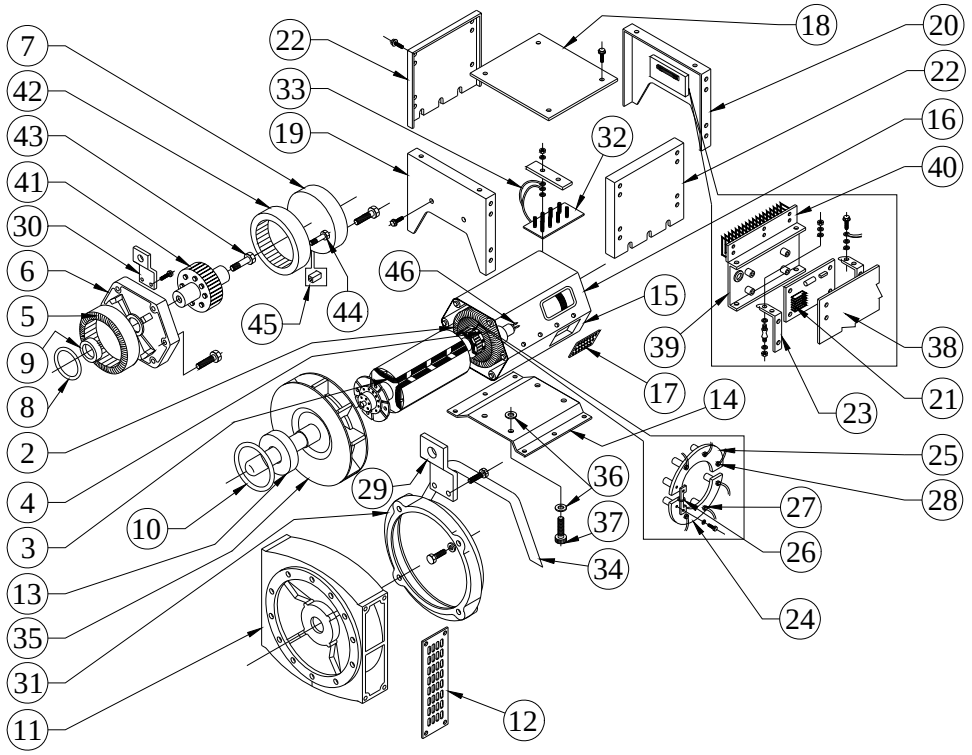

SR.NO.	PART NO.	DESCRIPTION	QTY.	REMARKS
32	4H.823.35.0.00	MAIN TERMINAL PANEL FOR UC224 ALTERNATOR (NEWAGE PART NO.-CG220-10003)	1	
33	4H.823.36.0.00	TERMINAL LINK FOR UC224 ALTERNATOR	1	
34	4H.823.37.0.00	EDGING STRIP FOR UC224 ALTERNATOR	1	
35	4H.823.38.0.00	FAN FOR UC224 ALTERNATOR	1	
36	4H.823.39.0.00	FOOT MOUNTING SPACER FOR UC224 ALTERNATOR	4	
37	4H.823.41.0.00	CAP SCREW FOR UC224 ALT.	4	
38	4H.823.42.0.00	AUTOMATIC VOLTAGE REGULATOR ACCESS COVER FOR UC224 ALTERNATOR	1	
39	4H.823.43.0.00	AUTOMATIC VOLTAGE REGULATOR ANTI VIBRATION MOUNTING ASSEMBLY FOR UC224 ALTERNATOR	1	

TITLE: -STAMFORD ALTERNATOR UC2244G, 75KVA, 220V, 60HZ, 3PH. SAE-3/11.5"	**GROUP: -** 06.1238

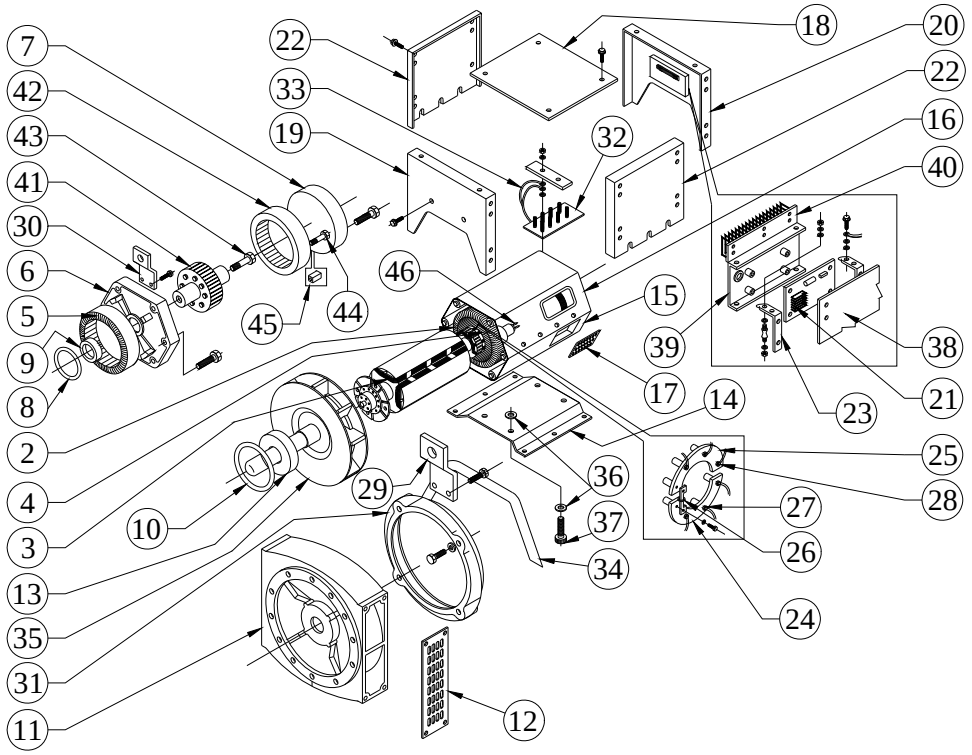

SR.NO.	PART NO.	DESCRIPTION	QTY.	REMARKS
40	4H.823.44.0.00	AUXILIARY TERMINAL ASSEMBLY FOR UC224 ALTERNATOR	1	
41	4H.823.45.0.00	PMG EXCITER ROTOR FOR UC224 ALTERNATOR (NEWAGE PART NO.-450-15358)	1	
42	4H.823.46.0.00	PMG EXCITER STATOR FOR UC224 ALTERNATOR (NEWAGE PART NO.-CG450-38300)	1	
43	4H.823.47.0.00	PMG BOLT FOR UC224 ALTERNATOR	1	
44	4H.823.48.0.00	PMG PILLAR FOR UC224 ALTERNATOR	1	
45	4H.823.49.0.00	PMG CLAMP FOR UC224 ALTERNATOR	1	
46	4H.823.51.0.00	PMG DOWEL FOR UC224 ALTERNATOR	1	

TITLE: -STARTER MOTOR 12V,3KW MICO MAKE FOR HA6 SERIES	**GROUP: -** 06.033

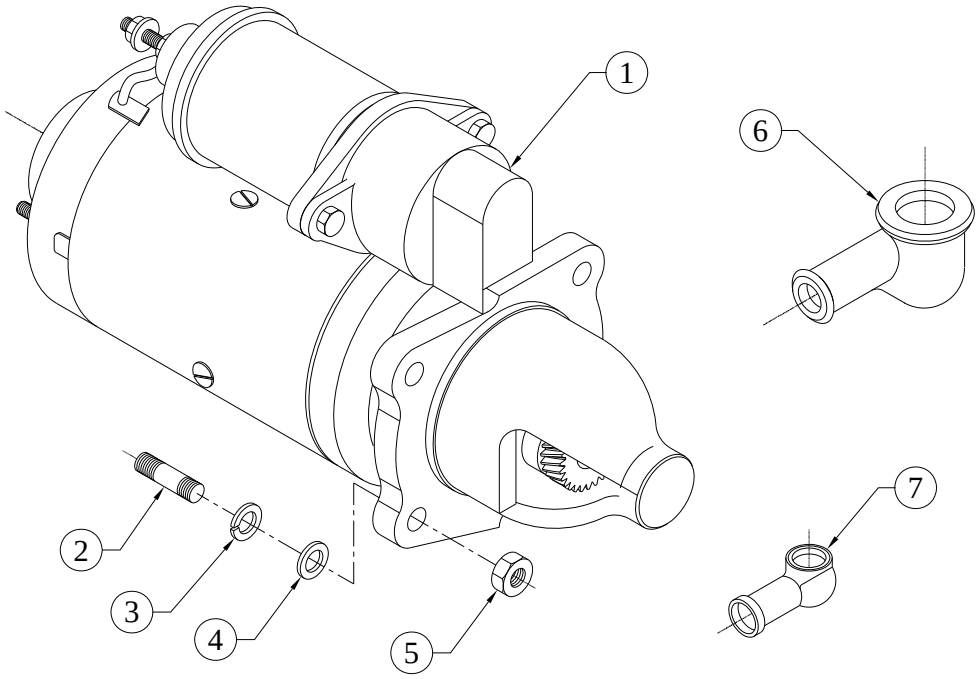

SR.NO.	PART NO.	DESCRIPTION	QTY.	REMARKS
1	06.033.01.0.00	STARTER MOTOR 12V, 3KW MICO MAKE FOR HA6 (DOM+EXPORT) (DWG. NO. F 002 G2A 335) (PART NO.F 002 G20 585) MODEL DE114L3KW	1	
2	03.001.12.0.00	PRECOATED STUD (FOR FUEL PUMP MOUNTING)	3	
3	50.505.10.000.	SPRING WASHER - M10	3	
4	50.506.10.000.	PLAIN MACHINED WASHER - M10	3	
5	50.006.10.000.	NUT - M10X1.5 - GR.8	3	
6	24.083.01.0.00	RUBBER SLEEVE (20DIA)	1	
7	22.118.01.0.00	RUBBER SLEEVE(12DIA)	1	

TITLE: -75 KVA 220 V 3PH 60 HZ STD CONTROL PANEL ASSEMBLY WITH DSE 6120 MKII & GEMS SENSOR (FOR OPEN SAUDI)	**GROUP: -** 06.1721.1

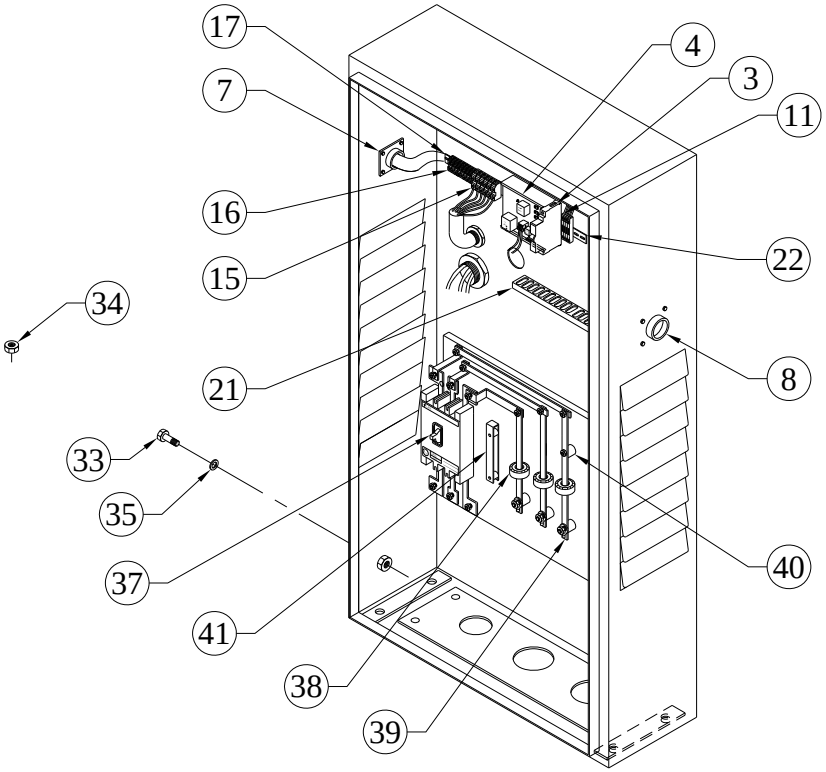

SR.NO.	PART NO.	DESCRIPTION	QTY.	REMARKS
*1	06.1721.20.0.PR	75 KVA 220 V 3PH 60 HZ STD CONTROL PANEL ASSEMBLY WITH DSE 6120 MKII & GEMS SENSOR (FOR OPEN SAUDI)	1	CONSISTING OF SR.NO. 2,10,19,20,32,36, 42
*2	2H.970.40.0.00	COMPONANT ASSEMBLE (MCB,PB,SELECTOR SW.) FOR STD. PANEL	1	CONSISTING OF SR.NO. 3 TO 9
3	3H.864.04.0.00	MCB 32A SP MERLINGERIN MAKE(C60H1P32AC)	1	
4	4H.865.27.0.00	RELAY BOARD 2 AND 1/2 CHANEL 12V DC	1	
5	6H.880.32.0.PR	ON/FF SELECTOR SW.(WITH NO ELEMENT)TEKINC MAKE METALLIC SERIES 2AS2-2P.	1	
6	6H.880.13.0.00	EMERGENCY STOP PB(WITH NC ELEMENT)SCHNEIDER/TELEMECA NIQUE MAKE HORMONY RANGE RELEASE MUSHROOM TYPE XB5A542N	1	

TITLE: -75 KVA 220 V 3PH 60 HZ STD CONTROL PANEL ASSEMBLY WITH DSE 6120 MKII & GEMS SENSOR (FOR OPEN SAUDI)	**GROUP: -** 06.1721.1

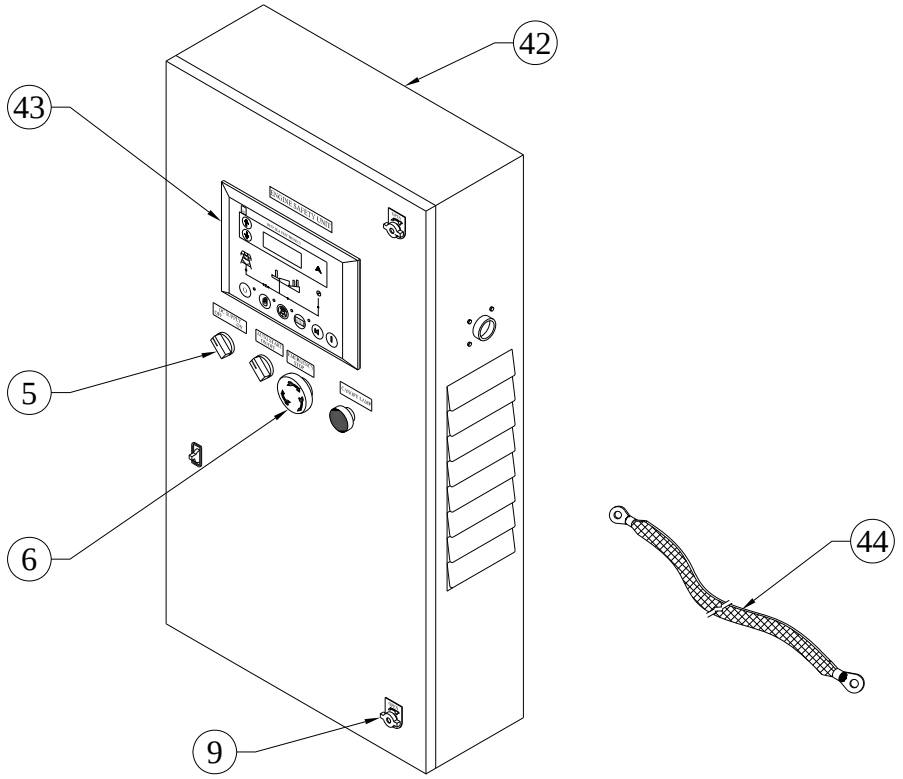

SR.NO.	PART NO.	DESCRIPTION	QTY.	REMARKS
7	2H.875.14.0.00	ALLIED/AMFINOL MAKE 10 PIN CONNECTOR TYPE MS3102R-18-1P	1	
8	04.932.04.0.00	10 PIN CONNECTOR ALLIDE/AMFINOL MAKE TYPE MS3106F-18-1S	1	
9	6H.880.16.0.00	DOOR LOCK DARSHANA MAKE ,TYPE-DM3WL-,DIE CAST ,STANDARD GRIP 30MM	2	
*10	2H.892.50.0.00	TERMINAL FUSE, PVC CHANEL, TERMINAL STRIP ASSEMBLY FOR STD . PANEL	1	CONSISTING OF SR.NO. 11 TO 18
11	4H.865.08.0.00	FUSE HOLDER WITH FUSE BLOWN INDICATOR PHONIX MAKE (220/230V)	3	
*12	4H.865.09.0.00	GLASS FUSE 2AMP. 20 MM RELAINCE/ EI MAKE	3	NOT ILLUSTRATED
*13	2H.892.09.0.00	FUSE BLOWN INDICATOR 12 /24 VDC PHONIX MAKE BLACK COLOUR R	1	NOT ILLUSTRATED

TITLE: -75 KVA 220 V 3PH 60 HZ STD CONTROL PANEL ASSEMBLY WITH DSE 6120 MKII & GEMS SENSOR (FOR OPEN SAUDI)	**GROUP: -** 06.1721.1

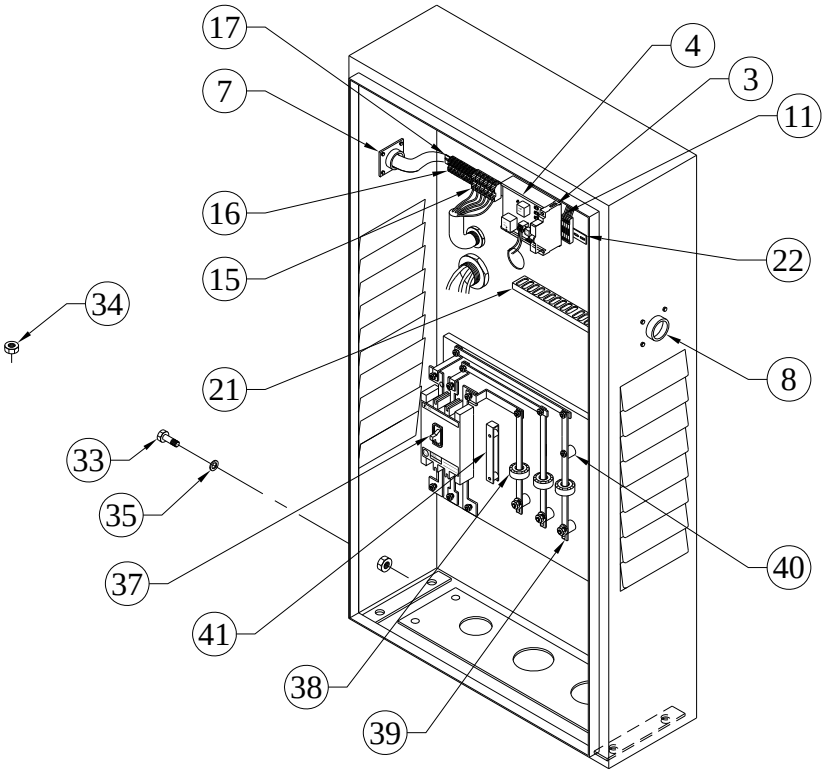

SR.NO.	PART NO.	DESCRIPTION	QTY.	REMARKS
*14	3H.870.08.0.00	GLASS FUSE 20 MM LENGTH 4 AMP	1	NOT ILLUSTRATED
15	4H.865.22.0.00	CONTROL TERMINAL 6 SQ.MM,600V,50A,TYPE-CTS6U, CONNECTWELL MAKE	4	
16	38.346.02.0.00	CONTROL TERMINAL 4 SQ.MM.,600V,25A,TYPE-CTS4UN,CONNECTWELL MAKE	13	
17	KV8.853.07.0.00	CONNECTWELL MAKE END CLAMP (AS REQUIRED)	6	
*18	2H.892.12.0.00	CONNECTWELL MAKE END PLATES FOR 4 SQ.MM TERMINAL STRIPS	2	NOT ILLUSTRATED
*19	03.301.21.0.PR	ENGINE CONTROL DWG. 3PH. WITH DSE 6120 MKII UNIT FOR (AIR COOLED) OPEN SET	1	NOT ILLUSTRATED
*20	2H.892.60.0.00	MISCELLANEOUS PARTS ASSEMBLY FOR STD.CONTROL PANEL	1	CONSISTING OF SR.NO. 21 TO 31

TITLE: -75 KVA 220 V 3PH 60 HZ STD CONTROL PANEL ASSEMBLY WITH DSE 6120 MKII & GEMS SENSOR (FOR OPEN SAUDI)	**GROUP: -** 06.1721.1

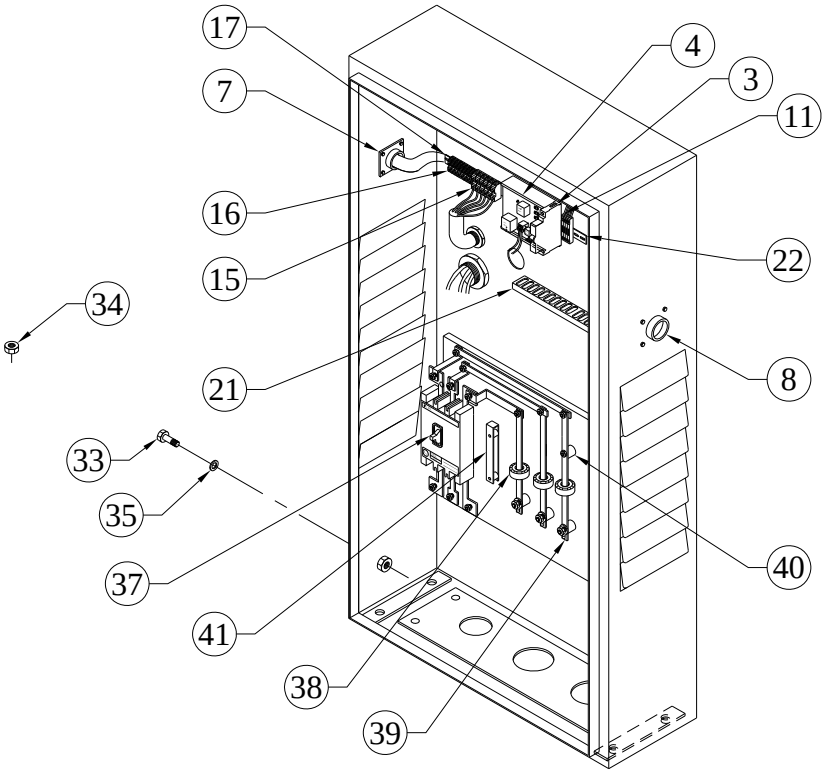

SR.NO.	PART NO.	DESCRIPTION	QTY.	REMARKS
21	2H.892.13.0.00	PVC CHNNEL SALZER MAKE 25 X 25 MM(LENGTH AS REQUIRED)	1	
22	4H.971.14.0.00	DIN RAIL WITH GREEN PASSIVATION(LENGTH AS REQUIRED)	0.5	
*23	4H.865.19.0.00	SPIRAL FOR WIRE BUNCH	1	NOT ILLUSTRATED
*24	3H.905.06.0.00	TIE WRAP 100 MM LENGTH (QTY. AS REQUIRED)	50	NOT ILLUSTRATED
*25	2H.892.07.0.00	CONTROL PANEL FRONT DOOR STICKER (40 x 10) & LETTER HIGHT 4 MMANODIZED WHITE BACKGROUND BLACK LETTER)	1	NOT ILLUSTRATED
*26	2H.892.06.0.00	LEGENDS FOR CONTROL PANEL INSIDE PARTS(20 X 8) LETTER HIGHT 3MM,Polycarbonate,sign written)	1	NOT ILLUSTRATED

TITLE: -75 KVA 220 V 3PH 60 HZ STD CONTROL PANEL ASSEMBLY WITH DSE 6120 MKII & GEMS SENSOR (FOR OPEN SAUDI)	**GROUP: -** 06.1721.1

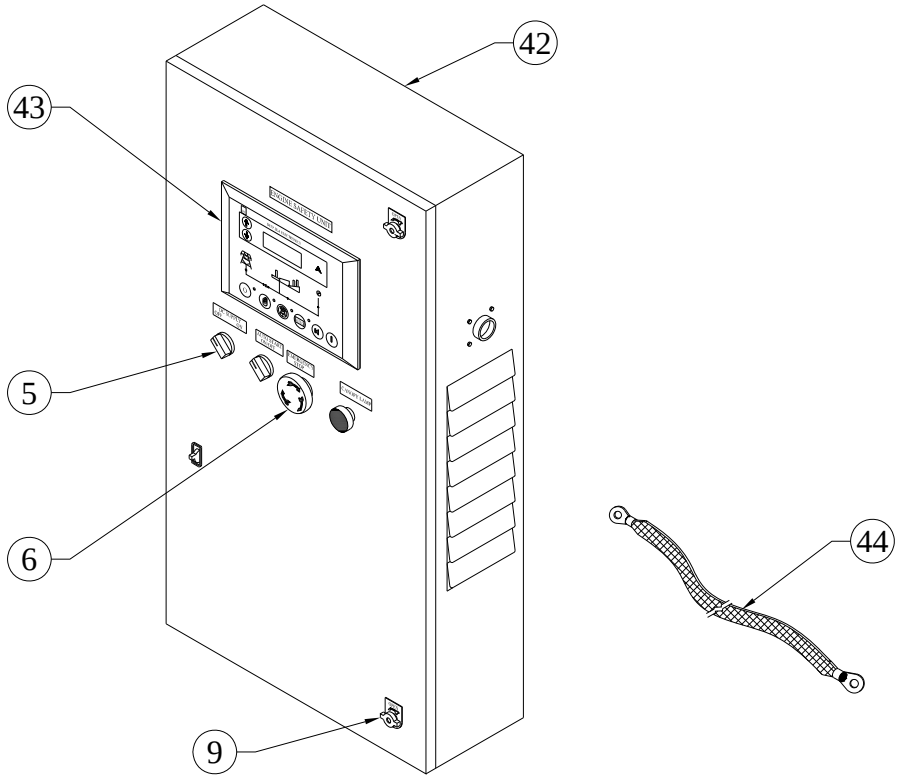

SR.NO.	PART NO.	DESCRIPTION	QTY.	REMARKS
*27	2H.892.08.0.00	CONTROL PANEL SERIAL NAME PLATE	1	NOT ILLUSTRATED
*28	2H.892.14.0.00	PRINTED FERRULE WHITE SLIVE BLACK LETTER 1 SETFOR CONTROL PANEL	1	NOT ILLUSTRATED
*29	2H.892.15.0.00	ANODIZED PLATE /LAMINATED STIKER SIZE . 280 X150 AS PER BOM ELECT. DWG.	1	NOT ILLUSTRATED
*30	4H.971.09.0.00	RUBBER GASKET(SELF ADESIVE 20X5 MM) FOR CONTROL PANEL DOOR & GLAND PLATE	4	NOT ILLUSTRATED
*31	2H.892.31.0.00	RUBBER GROMET FOR EVERY CONTROL PANELBLANCK HOLE	1	NOT ILLUSTRATED
*32	2H.892.70.0.00	EARTHING ASSEMBLY	1	CONSISTING OF SR.NO. 33 TO 35
33	4H.971.18.0.00	SET BOLT M8 (ROLLED BRASS) FOR PANEL EARTHING	2	

TITLE: -75 KVA 220 V 3PH 60 HZ STD CONTROL PANEL ASSEMBLY WITH DSE 6120 MKII & GEMS SENSOR (FOR OPEN SAUDI)	**GROUP: -** 06.1721.1

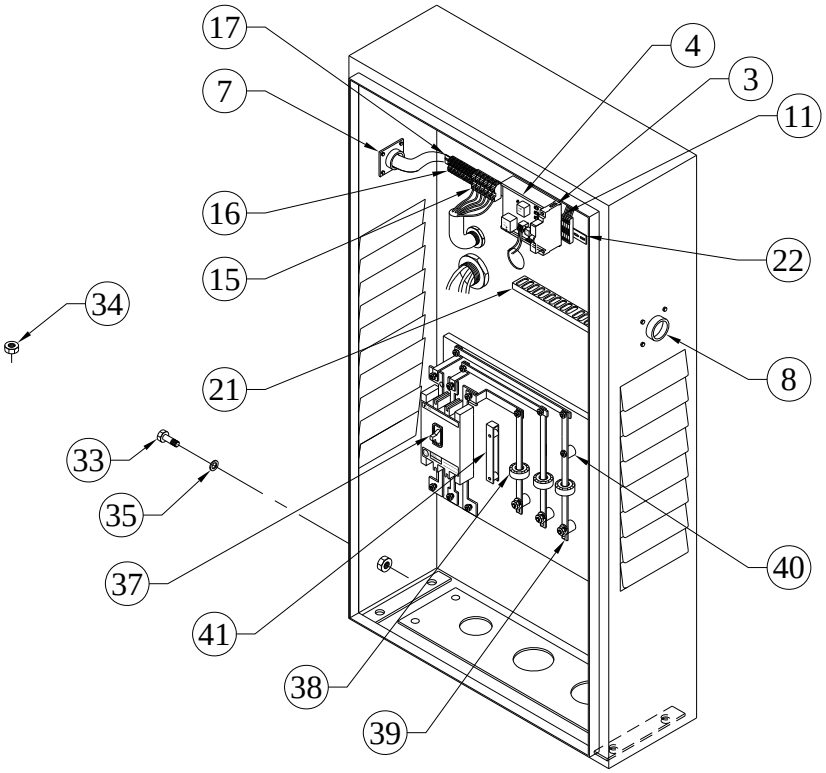

SR.NO.	PART NO.	DESCRIPTION	QTY.	REMARKS
34	4H.971.19.0.00	M8 NUT ROLLED BRASS FOR PANEL EARTHING SHANTI PROJECT	4	
35	4H.971.23.0.00	M8 BRASS WASHER FOR PANEL EARTHING	4	
*36	06.1721.40.0.00	MCCB,CT,BUS BAR WITH INSHULATOR , ASSEMBLY FOR 220 AMP	1	CONSISTING OF SR.NO. 37 TO 41
37	06.1721.11.0.00	SCHNIEDER MAKE MCCB 3POLE 250A TYPE- LV525311N(ADJEST IR POINT ON 0.85 (213A))	1	
38	F6.989.05.0.00	CURRENT TRANSFARMOR 300/5, 5 VA (NEWTEK MAKE)	3	
39	4H.1735.04.0.00	COPPER BUS BAR ZINC PLATED 30X5 MM WITH INSHULATED SLIVE	2	
40	F6.864.04.0.00	BUS BAR SUPPORT INSULATOR 50 MM LENGTH	8	

TITLE: -75 KVA 220 V 3PH 60 HZ STD CONTROL PANEL ASSEMBLY WITH DSE 6120 MKII & GEMS SENSOR (FOR OPEN SAUDI)	**GROUP: -** 06.1721.1

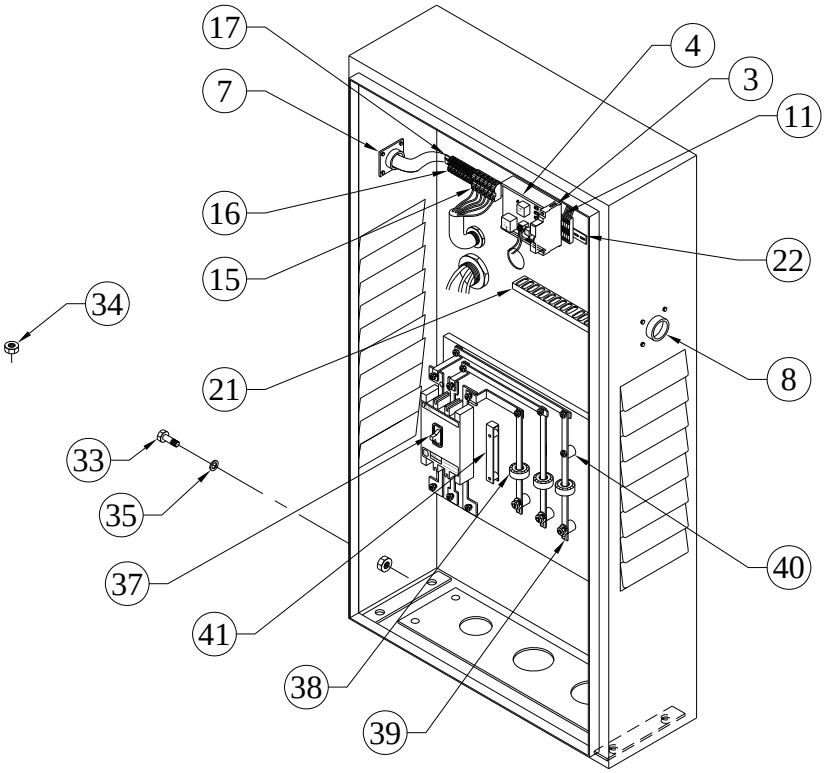

SR.NO.	PART NO.	DESCRIPTION	QTY.	REMARKS
41	4H.1735.08.0.00	NEUTRAL LINCK 100 AMP CAPACITY	1	
42	4H.1733.01.0.00	CONTROL PANEL FAB. DWG. WITH KG6122 ENGINE CONTOLLER FOR 4R T & TA & 6R EINGINE (FOR OPEN GENSET)	1	
43	6H.877.11.0.PR	GENERATOR CONTROL UNIT MODEL DSE 6120 MK-II	1	
44	4H.872.03.0.00	EARTHING CABLE (BRADED) 6MM DIA. WITH SUITABLE LUG. ALT. TO BASE PLATE FOR 50 & 72 KVA SAUDI PROJECT.350MM LENGTH	2	
*45	06.799.46.0.PR	75Kva DSE 6120 MKII PROGRAMME	1	NOT ILLUSTRATED

TITLE: - STICKER FOR "KG75A"	**GROUP: -** 02.710.68

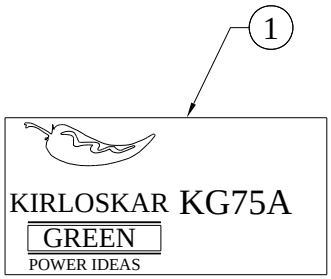

SR.NO.	PART NO.	DESCRIPTION	QTY.	REMARKS
1	02.710.68.0.00	STICKER FOR "KG75A"	1	

TITLE: -STICKER FOR GENSET.	**GROUP: -** 02.402

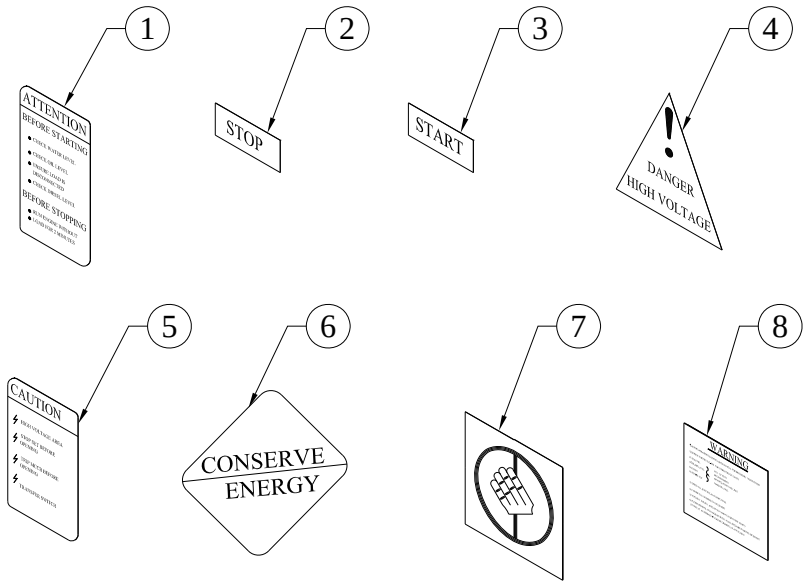

SR.NO.	PART NO.	DESCRIPTION	QTY.	REMARKS
1	02.402.01.0.00	ATTENTION STICKER FOR HA	1	
2	38.065.07.0.00	STICKER FOR "STOP"	1	
3	38.065.11.0.00	STICKER FOR "START"	1	
4	02.402.03.0.00	DANGER HIGH VOLTAGE STICKER	1	
5	02.402.04.0.00	CAUTION STICKER	1	
6	02.402.05.0.00	ENERGY STICKER	1	
7	02.402.07.0.00	DO NOT TOUCH STICKER	2	
8	38.065.71.0.00	WARNING STICKER	1	

TITLE: - STOP SOLENOID 12V DC, S/F FUEL PUMP MOUNTED &C TYPE LEVER FOR HA SERIES ENGINE	**GROUP: -** 02.663

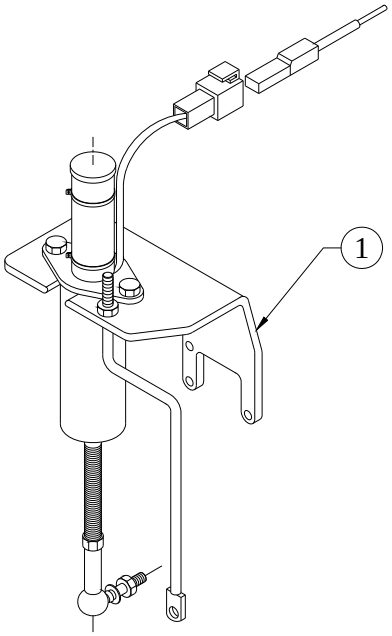

SR.NO.	PART NO.	DESCRIPTION	QTY.	REMARKS
1	02.663.10.0.00	FUEL PUMP MOUNTED STOP SOLENOID (ENERGISE TO STOP) ASSEMBLY 12V AUTO ELECTRONIC/ECTRO CONTROL/SAUDAMINI MAKE WITH ALL PARTS& HARDWARE FOR HA SERIES ENGINE.	1	

TITLE: -SUCTION TUBE (FOR PRESSED SUMP)	**GROUP:** -06.555

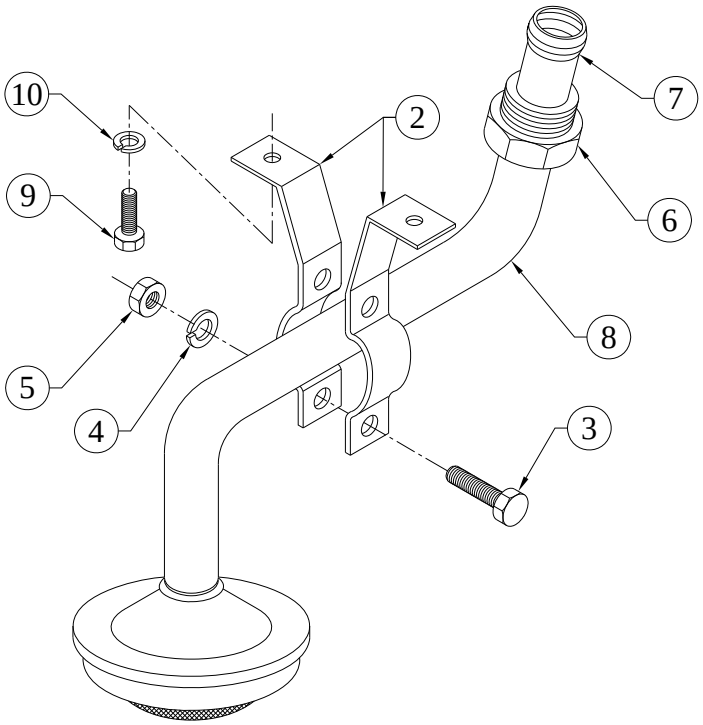

SR.NO.	PART NO.	DESCRIPTION	QTY.	REMARKS
*1	06.555.20.0.00	SUCTION TUBE ASSLY(FOR PRESSED SUMP)	1	CONSISTING OF SR.NO. 2 TO 8
2	06.008.04.0.00	CLAMPING STRAP	2	
3	50.003.06.012.	SET SCREW - M6X1X12 - 8.8	2	
4	50.505.06.000.	SPRING WASHER - M6	2	
5	50.006.06.000.	NUT - M6X1 - GR.8	2	
6	06.008.02.0.00	UNION SCREW	1	
7	06.008.03.0.00	DOUBLE CONE RING	1	
8	06.555.10.0.00	SUB ASSLY OF SUCTION TUBE(PRESSED SUMP)	1	
9	50.003.08.016.	SET SCREW - M8X1.25X16 - 8.8	2	
10	50.505.08.000.	SPRING WASHER - M8	2	

TITLE: - SUPRABHA BAG DIMN LxWxH (2350 x 1200 x 1550)	**GROUP: -** 2H.450.33

SR.NO.	PART NO.	DESCRIPTION	QTY.	REMARKS
*1	2H.450.33.0.00	SUPRABHA BAG DIMN LxWxH (2350 x 1200 x 1550)	1	NOT ILLUSTRATED NOT SUPPLIED LOOSE

TITLE: -TACHODRIVE ARRANGEMENT	**GROUP: -** 03.117

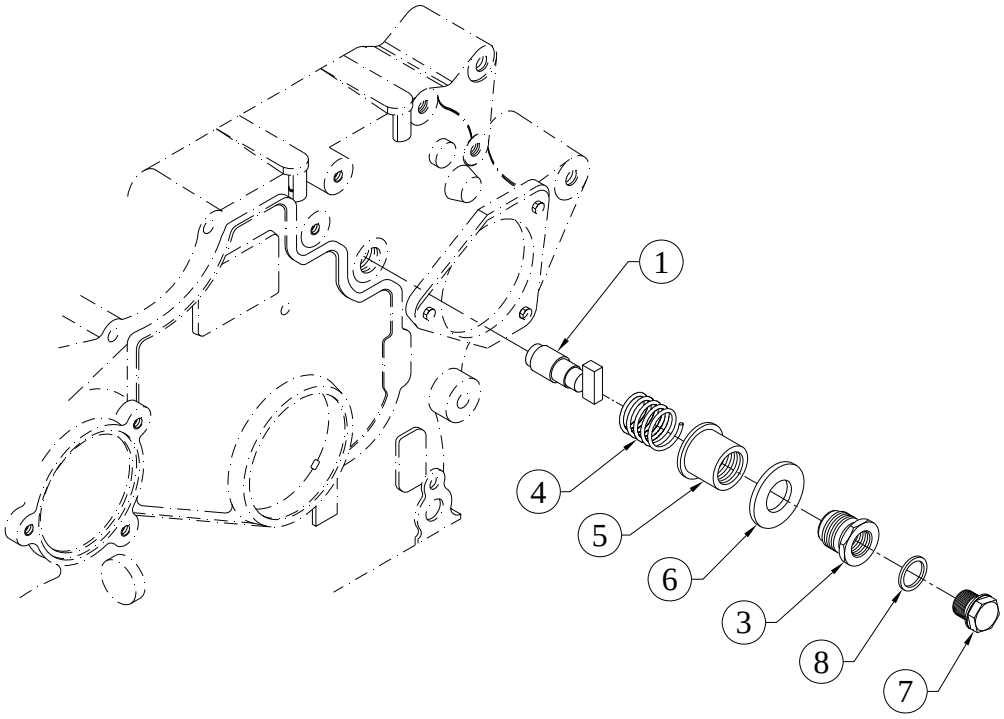

SR.NO.	PART NO.	DESCRIPTION	QTY.	REMARKS
1	03.117.02.0.00	PIN	1	
*2	03.117.20.0.00	SUB ASSLY OF TACHO DRIVEUNIT	1	CONSISTING OF SR. NO. 3 TO 6
3	03.117.04.0.00	ADAPTOR (FOR TACHODRIVE)	1	NOT SUPPLIED LOOSE
4	03.014.06.0.00	SPRING FOR CUP	1	NOT SUPPLIED LOOSE
5	03.014.07.0.00	CUP FOR SPRING	1	NOT SUPPLIED LOOSE
6	50.508.27.000.	COPPER WASHER (24X29)	1	NOT SUPPLIED LOOSE
7	02.520.04.0.00	PRECOATED PLUG	1	
8	50.508.16.000.	COPPER WASHER (18X22)	1	

TITLE: -TOP AIR BAFFLE	**GROUP: -** 06.022

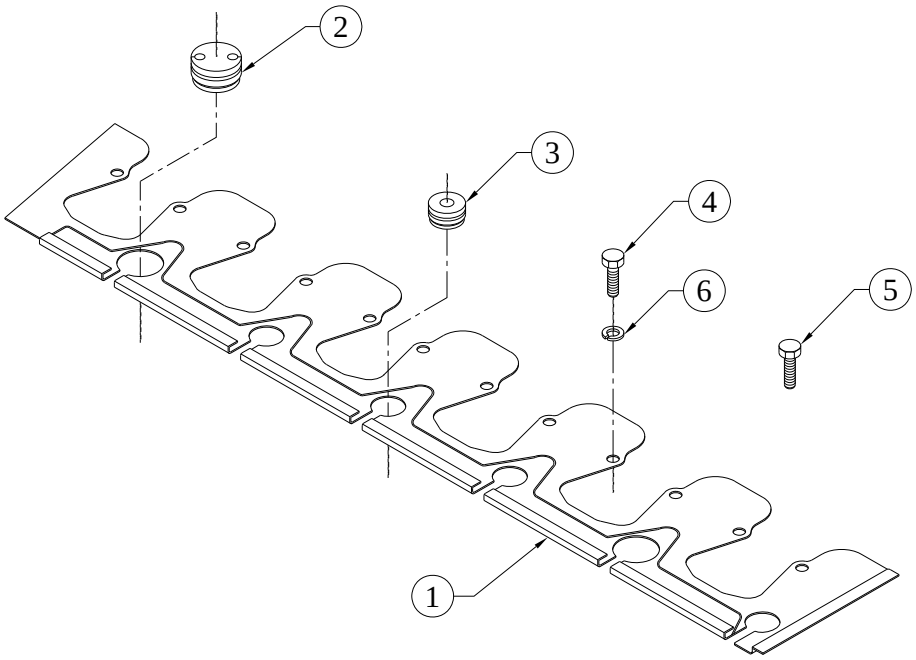

SR.NO.	PART NO.	DESCRIPTION	QTY.	REMARKS
1	06.022.01.0.00	TOP AIR BAFFLE (KHD NO 0223 5846)	1	
2	03.022.02.0.00	RUBBER GROMMET	2	
3	03.022.03.0.00	RUBBER GROMMET	3	
4	50.003.06.012.	SET SCREW - M6X1X12 - 8.8	11	
5	50.003.06.014.	SET SCREW - M6X1X14 - 8.8	1	
6	50.505.06.000.	SPRING WASHER - M6	12	

TITLE:- TURBOCHARGER(K26)	**GROUP:-** 06.766

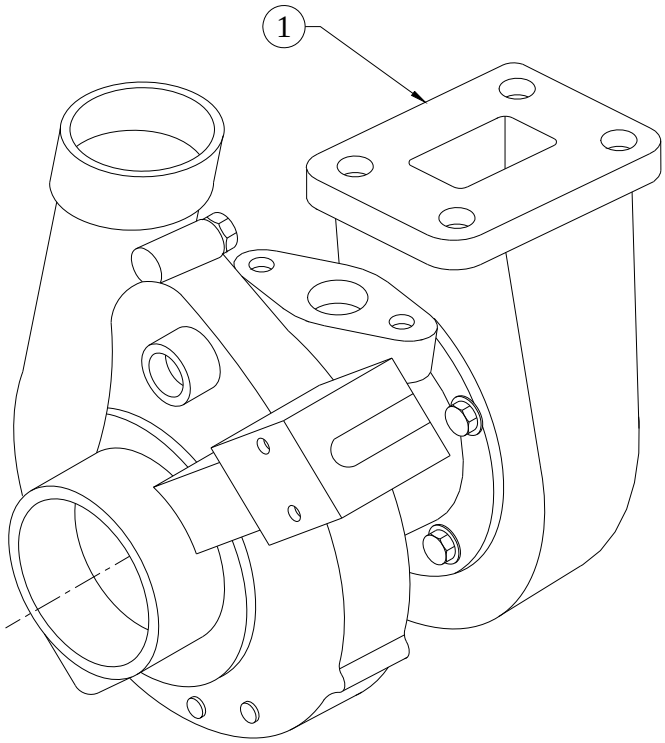

SR.NO.	PART NO.	DESCRIPTION	QTY.	REMARKS
1	06.766.10.0.00	TURBOCHARGER (K26)	1	

TITLE: -UPPER COWLING	**GROUP: -** 06.029

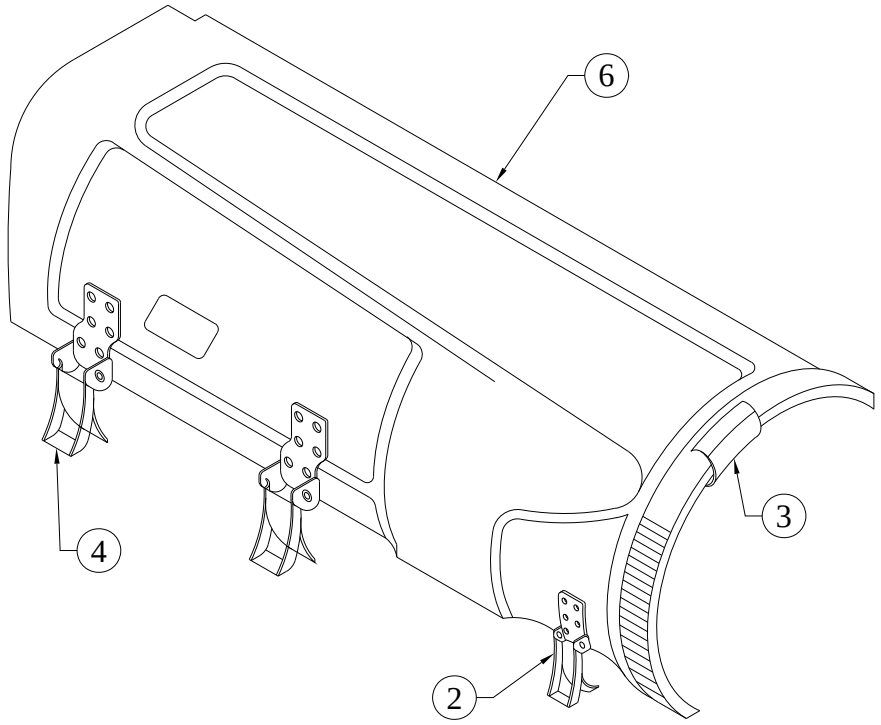

SR.NO.	PART NO.	DESCRIPTION	QTY.	REMARKS
*1	06.029.10.0.00	UPPER COWLING (KHD NO 0210 1785)	1	CONSISTING OF SR.NO. 2 TO 7
2	03.029.02.0.00	COWLING CLAMP ASSLY RIGHT	1	NOT SUPPLIED LOOSE
3	03.029.03.0.00	WELDED ANGLE PIECE	2	NOT SUPPLIED LOOSE
4	03.029.04.0.00	COWLING CLAMP ASSLY LEFT	1	NOT SUPPLIED LOOSE
*5	03.029.05.0.00	CLAMPING STRIP	3	NOT ILLUSTRATED NOT SUPPLIED LOOSE
6	06.029.01.0.00	UPPER COWLING	1	NOT SUPPLIED LOOSE
*7	50.522.04.025.	COPPER RIVET 1/8"X1"	3	NOT ILLUSTRATED NOT SUPPLIED LOOSE

TITLE:- VBELT (A-47)	**GROUP:-** 04.140

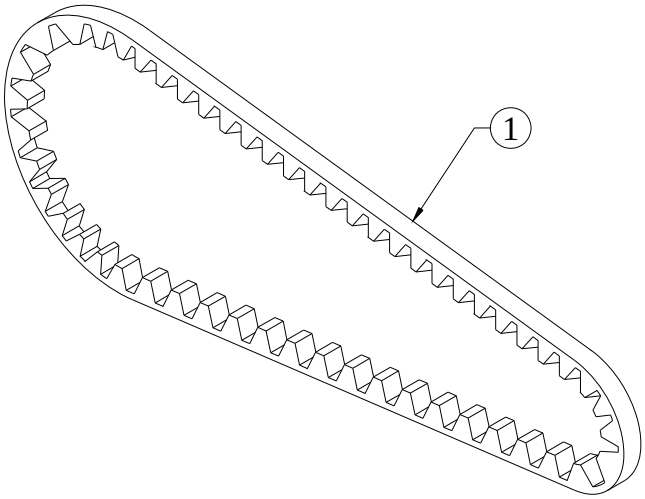

SR.NO.	PART NO.	DESCRIPTION	QTY.	REMARKS
1	04.140.01.0.00	V BELT (A-47)	1	

TITLE :-V BELT FAILURE SWITCH KHD-224 5023	**GROUP :-** 04.106

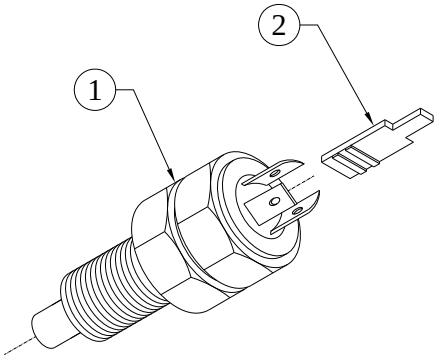

SR.NO.	PART NO.	DESCRIPTION	QTY.	REMARKS
1	04.106.01.0.00	V BELT FAILURE SWITCH KHD-224 5023	1	
2	03.665.05.0.00	SNAP ON TERMINAL DOWEL	3	

TITLE: - VALVE MECHANISM SUITABLE FOR –30 DEGREE C	**GROUP: -** 02.024

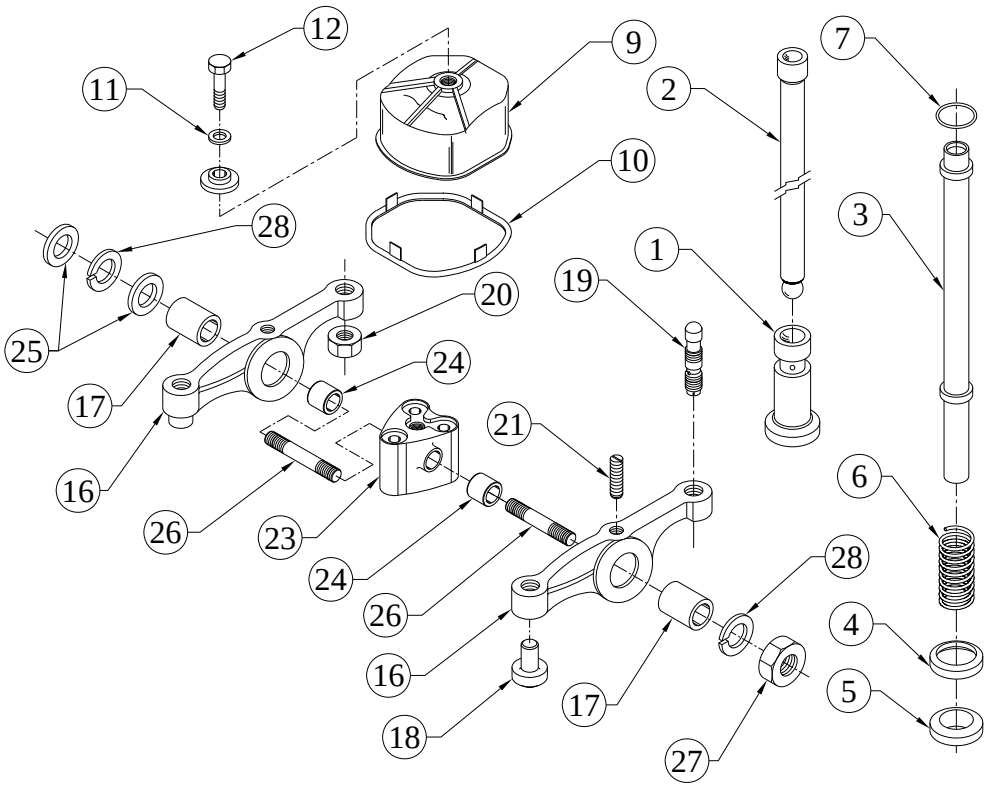

SR.NO.	PART NO.	DESCRIPTION	QTY.	REMARKS
1	02.024.01.0.00	VALVE TAPPET	2	
2	02.024.70.0.00	PUSH ROD (WELDED)	2	
3	02.024.33.0.00	PUSH ROD TUBE COVER - HA	2	
4	02.024.02.0.00	SEALING RING BOTTOM	2	
5	02.024.03.0.00	SEALING RING CAP	2	
6	02.024.04.0.00	SPRING	2	
7	02.024.05.0.00	O RING - TOP P.R.TUBE (5.3X17,21507)	2	
*8	02.024.100.0.00	SUB ASSLY OF ROCKER COVER WITH FOAMET GASKET	1	CONSIST OF SR. NO. 9, 10
9	02.024.32.0.00	ROCKER COVER (ALU)	1	
10	02.024.97.0.00	GASKET FOR ROCKER COVER HIGH TEMPERATURE APPLICATION IN FLUOROELASTOMER FOAMET (FKM)	1	
11	50.506.08.000.	PLAIN MACHINED WASHER - M8	2	
12	50.002.08.030.	SET BOLT - M8X1.25X30 - 8.8	1	

TITLE: - VALVE MECHANISM SUITABLE FOR –30 DEGREE C	**GROUP: -** 02.024

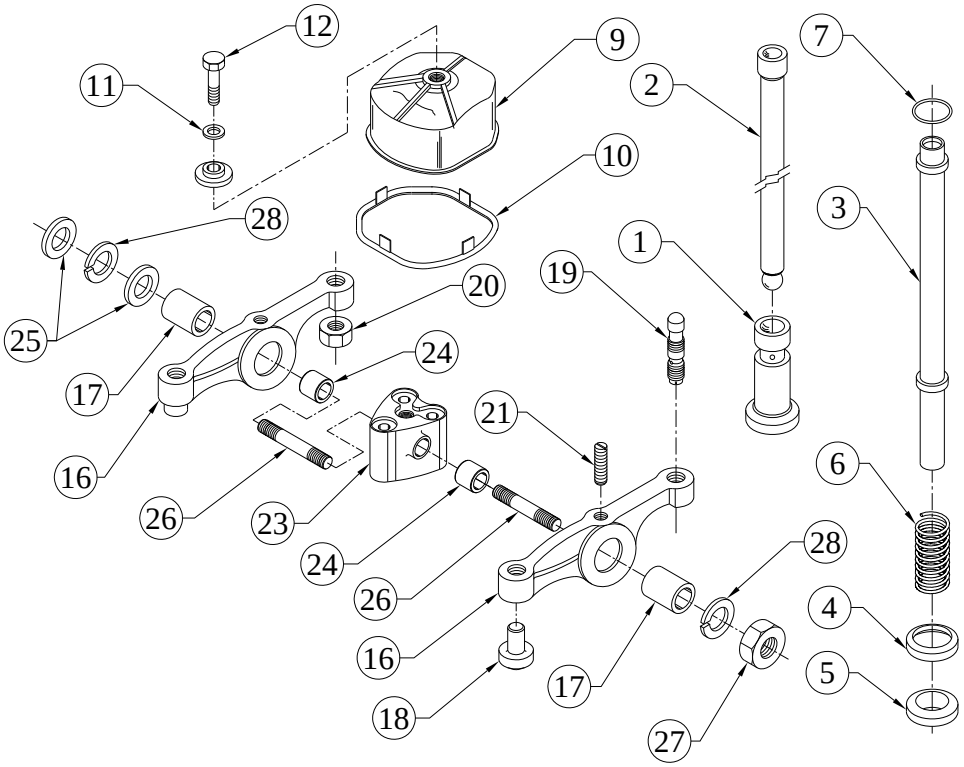

SR.NO.	PART NO.	DESCRIPTION	QTY.	REMARKS
*13	02.024.50.0.00	ROCKER LEVER ASSEMBLY	1	CONSISTING OF SR. NO. 14, 22
*14	02.024.20.0.00	VALVE ROCKER ASSLY	2	CONSISTING OF SR. NO. 15 & 18 TO 21
*15	02.024.23.0.00	ROCKER ARM SUB ASSEMBLY (WITH VR BUSH)	1	CONSISTING OF SR. NO. 16, 17
*16	02.024.11.0.00	ROCKER ARM	1	NOT SUPPLIED LOOSE
17	02.024.12.9.00	V.R. BUSH (SEMI FINISH)	1	NOT SUPPLIED LOOSE
18	02.024.15.0.00	V.R.TOE	1	NOT SUPPLIED LOOSE
19	02.024.13.0.00	ROCKER-ARM ADJ. SCREW	1	
20	02.024.27.0.00	NUT FOR ROCKER ADJ.SCREW	1	
21	02.024.14.0.00	OIL METERING SCREW	1	
*22	02.024.30.0.00	V.R.SUPPORT SUB-ASSLY.	1	CONSISTING OF SR. NO. 23 TO 28

TITLE: - VALVE MECHANISM SUITABLE FOR –30 DEGREE C	**GROUP: -** 02.024

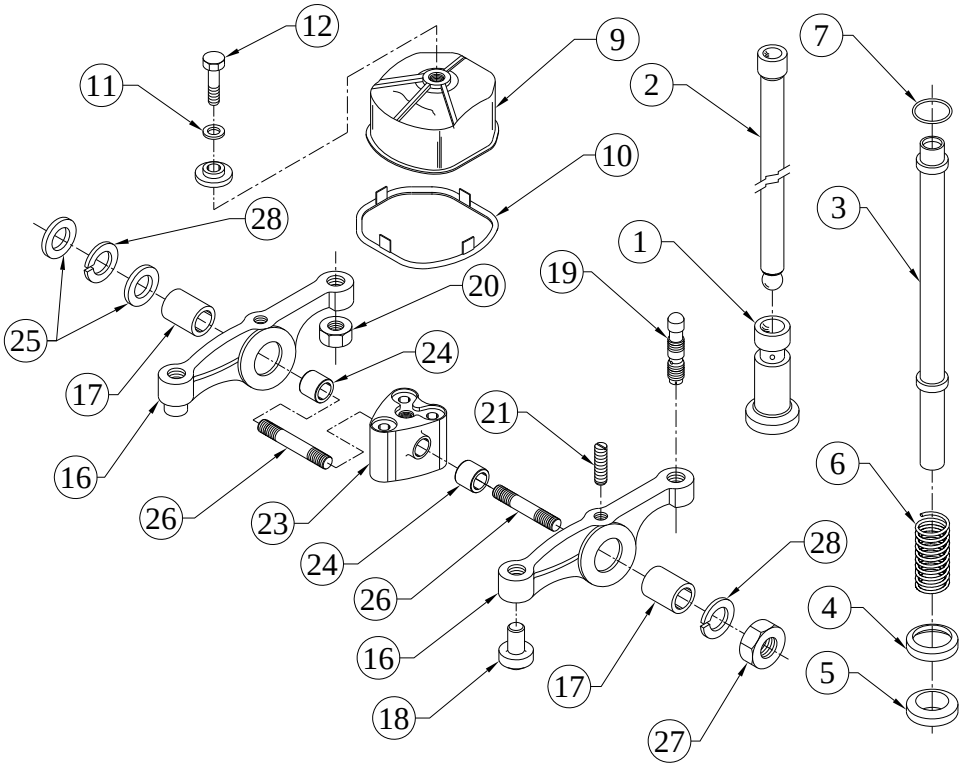

SR.NO.	PART NO.	DESCRIPTION	QTY.	REMARKS
23	02.024.08.0.00	ROCKER ARM SUPPORT	1	NOT SUPPLID LOOSE
24	02.024.25.0.00	BUSH FOR SUPPORT	2	NOT SUPPLID LOOSE
25	02.024.09.0.00	WASHER	2	
26	02.024.31.0.00	STUD	2	
27	50.006.10.000	NUT - M10X1.5 - GR.8	2	
28	50.505.10.000	SPRING WASHER - M10	2	

TITLE: -SET OF JOINTS, COPPER WASHERS & 'O' RINGS (06.4432)	**GROUP: -**

SR.NO.	PART NO.	DESCRIPTION	QTY.	REMARKS
***1**	**06.1007.10.0.00**	**SET OF JOINTS**	**1**	CONSITING OF SR.NO. 2 TO 15
*2	02.024.97.0.00	GASKET FOR ROCKER COVER HIGH TEMPERATURE APPLICATION IN FLUOROELASTOMER FOAMET (FKM)	6	
*3	02.045.08.0.00	JOINT (FOR EXH. INLET)	6	
*4	02.058.07.0.00	JOINT FOR AIR INLET MANIFOLD (ASBESTOSS FREE)	6	
*5	03.013.12.0.00	JOINT FOR FRONT COVER (ASBESTOSS FREE)	1	
*6	03.040.07.0.00	JOINT FOR L.O FILTER (ASBESTOSS FREE)	1	
*7	03.080.15.0.00	JOINT FOR COVER (B.T.UNIT)	1	
*8	03.774.04.0.00	JOINT FOR COVER(AUX.L.O.SUMP)	2	
*9	06.468.03.0.00	JOINT FOR EXH DIFFUSER DOWN OPEN(OUTLET) STAINLESS STEEL	1	

TITLE: -SET OF JOINTS, COPPER WASHERS & 'O' RINGS (06.4432)	**GROUP: -**

SR.NO.	PART NO.	DESCRIPTION	QTY.	REMARKS
*10	06.764.03.0.00	JOINT FOR TURBOCHARGER	2	
*11	4H.039.02.0.00	JOINT FOR W.I.CONN.& THERMO.HSG.	1	
*12	4H.130.07.0.00	JOINT S S FOR ADAPTOR RING	1	
*13	4H.132.27.0.00	JOINT FOR ADAPTOR (TURBO SIDE)	1	
*14	4H.132.29.0.00	JOINT FOR LUB OIL DRAIN PIPE	1	
*15	4H.971.09.0.00	RUBBER GASKET(SELF ADESIVE 20X5 MM) FOR CONTROL PANEL DOOR & GLAND PLATE	4	
***16**	**06.1007.11.0.00**	**SET OF COPPER WASHERS**	**1**	CONSITING OF SR.NO. 17 TO 26
*17	02.022.25.0.00	COPPER WASHER	12	
*18	50.508.08.000.	COPPER WASHER (10X16)	7	
*19	50.508.10.000.	COPPER WASHER (12X18)	10	
*20	50.508.11.000.	COPPER WASHER (14X18)	1	
*21	50.508.12.000.	COPPER WASHER (14X20)	14	
*22	50.508.13.000.	COPPER WASHER (16X20)	1	

TITLE: -SET OF JOINTS, COPPER WASHERS & 'O' RINGS (06.4432)	**GROUP: -**

SR.NO.	PART NO.	DESCRIPTION	QTY.	REMARKS
***23**	50.508.16.000.	COPPER WASHER (18X22)	1	
*24	50.508.17.000.	COPPER WASHER (18X24)	3	
*25	50.508.18.000.	COPPER WASHER (20X24)	2	
*26	50.508.27.000.	COPPER WASHER (24X29)	1	
***27**	**06.1007.12.0.00**	**SET OF 'O' RINGS**	**1**	CONSITING OF SR.NO. 28 TO 39
*28	02.024.02.0.00	SEALING RING BOTTOM	12	
*29	02.024.03.0.00	SEALING RING CAP	12	
*30	02.024.05.0.00	O RING - TOP P.R.TUBE (5.3X17,21507)	12	
*31	02.120.05.0.00	SEALING RING	6	
*32	03.010.11.0.00	O RING - L.O.PUMP (1.57X65,21508)	1	
*33	03.012.02.0.00	O RING - DELIVERY TUBE(3X14,21508)	2	
*34	03.013.11.0.00	O RING (3.2 X 78 SILICON)	2	
*35	03.036.01.0.00	O RING - DIPSTICK (2X5,21515 OR 21511)	3	

TITLE: -SET OF JOINTS, COPPER WASHERS & 'O' RINGS (06.4432)	**GROUP: -**

SR.NO.	PART NO.	DESCRIPTION	QTY.	REMARKS
*36	04.296.02.0.00	SEALING RING FOR FILTER(KHD NO 111 8693)	2	
*37	06.020.05.0.00	SEALING RING (SOLID) HA6 REGULAR	1	
*38	06.219.03.0.00	SEALING RING	2	
*39	3H.132.03.0.00	SEALING RING (FUEL FILTER)	2	

TITLE: - SET OF BEARINGS (06.4432)

SR.NO.	PART NO.	DESCRIPTION	QTY.	REMARKS
		SET OF MAIN BEARINGS		
*1	06.025.13.0.00	BALL BEARING(25X52X15) 6205Z,C3	1	
*2	06.085.05.0.00	BALL BEARING(25X62X17) 6305Z,C3	1	
*3	02.001.87.0.00	MAIN BEARING HALF(STANDARD)	14	
*4	02.001.07.0.00	MAIN BRG TOP & BOTTOM	7	
		SET OF CONROD BEARINGS		
*5	04.685.02.0.00	CONNECTING ROD BIG END BEARING(NA)	12	
		SET OF THRUST WASHERS		
*6	03.001.21.0.00	THRUST WASHER (DRIVE END,BOTTOM)	1	
*7	03.006.02.0.00	THRUST WASHER (FOR CAMSHAFT)	1	
*8	04.301.12.0.00	THRUST WASHER 18 X 32 X 1.5	1	
*9	04.301.13.0.00	THRUST WASHER 18.2 X 32 X 0.3	1	
*10	03.001.19.0.00	THRUST WASHER -DRIVE END,TOP	1	